1.SAFETY INSTRUCTIONS

Read and understand this entire manual before attempting to assemble, operate,or install the LED Luminaire.

—All electrical work must conform to the Nation Electric Code(NEC) and all applicable local codes and ordinances

—Only qualified personnel shall install and maintain the luminaires. Verify the safety of existing power distribution system beginning installation.Failure to follow operating Instructions may lead to death,Severe Injury, or property Damage

—Turn off power before performing any electrical or control work, FAILURE TO FOLLOW THIS WARNING MAY LEAD TO DEATH , SEVERE INSJURY,OR PROPERTY DAMAGE . DO not make or alter any open holes in the luminaire . Do not modify the luminaire.

—Follow all applicable safety procedures and use Personal protective equipment such as hardhats ,safety glasses ,reflective vests , electrical safety gloves , fall protection equipment and safety toe boots during the installation ,operation and maintenance of the luminaire ,FAILURE TO FOLLOW THIS WARNING MAY LEAD TO DEATH ,SEVERE INJURY ,OR PROPERTY DAMAGE

— Risk of eye injury ! Eye protection is required at all times during the installation ,operation , and maintenance of the luminaire . The high intensity light produced by the luminaire can cause severe damage to the eye if viewed directly at close range . Aviod being in front of a luminaire that is on or wear suitable light blocking protective eyewear such as welding goggles . the luminaire should be positioned so that prolonged staring into the luminaire at a distance closer than 10m not expected Store luminaires in a clean ,dry place , protected from dirty ,water ,and sunlight . See table for required storage and operating conditions

Storage Temperature	Operating Temperature	Humidity
-40℃ to +75℃（-40°F to 167°F）	-40℃ to +45℃（-40°F to 113°F）	5% to 95% non-condsing

SUPPLY POWER SPECIFICATIONS

LED Stadium Eyes Light fixtures are not traditional incandescent lights, they are high-tech, new generation solid-state devices. To protect your valuable investment, the electrical power shall be clean and have stable voltage and current and undistorted waveforms.

2.INSTALLATION INSTRUCTIONS

Mount The Luminaire

The first step is to attach the luminaire to the mounting structure. The mounting structure may be a light pole cross arm, an indoor catwalk bracket, or other structural component that will hold the fixture in place.

①Rack mounting

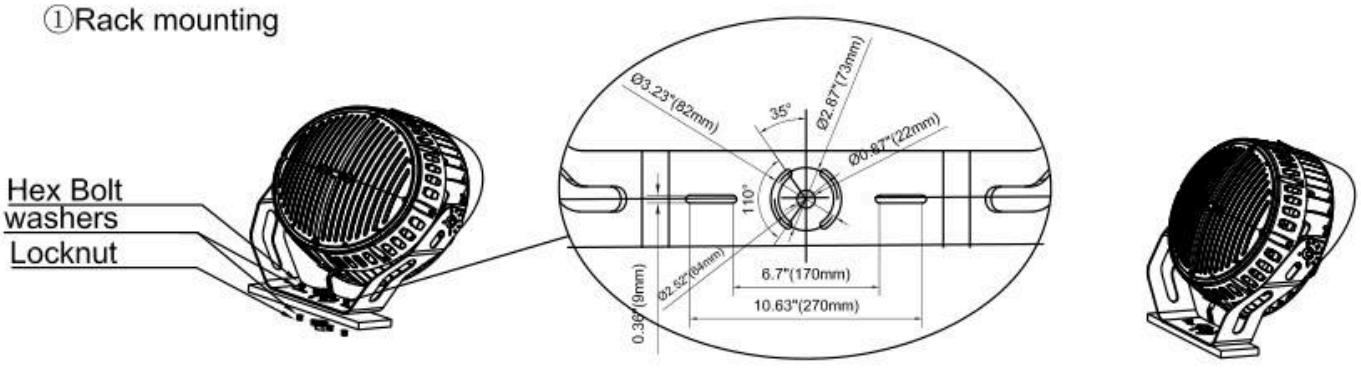

(1)Hold luminaire in place and install bolt, flat washers, and nut to securely fasten the fixture mounting bracket to the mounting structure.

(2)Lock the fixture on the wrench(pay attention wrench can hold weight of four times of the fixture).

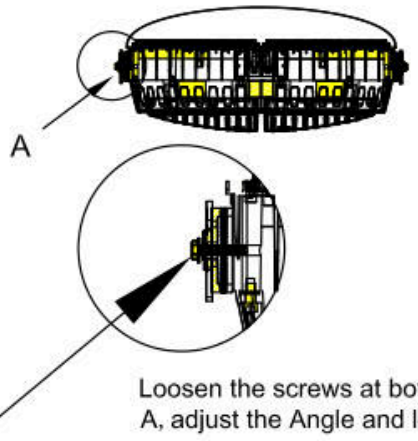

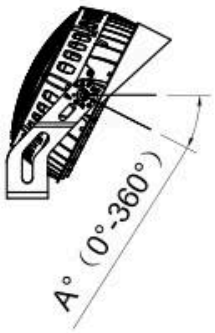

Loosen the screws at both ends as shown in figure A, adjust the Angle and lock the fixing screw.

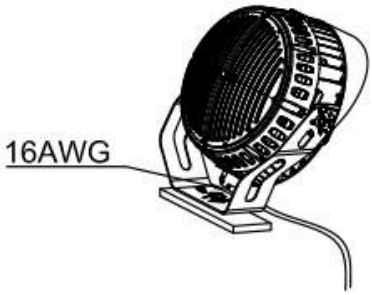

Connect the AC line,AC line for 16 AWG.

This is the most common mounting. The luminaire sits on top of mounting structure.

1.Refer to the project Installation Drawings to determine luminaire installation locations and lens type.

2.For each fixture location, install a luminaire that has the correct lens type. Unless otherwise noted, fixtures that share the same lens type are identical.

3.Remove the clear protective film from the front of the lenses, if present.

② Inverted Mounting

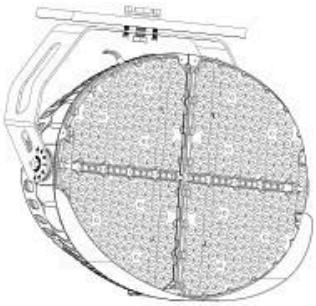

(1)Hold luminaire in place and install bolt, flat washers, and nut to securely fasten the fixture mounting bracket to the mounting structure.

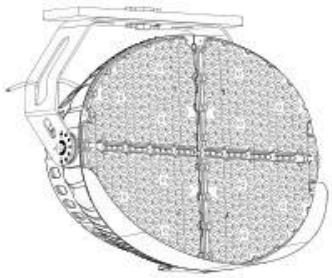

(2)Lock the screw with a wrench.

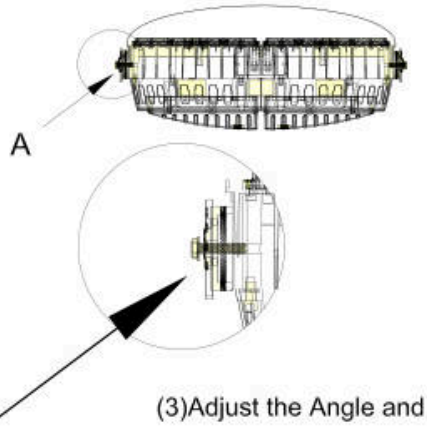

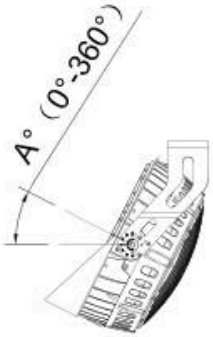

(3)Adjust the Angle and lock the fixing screw.

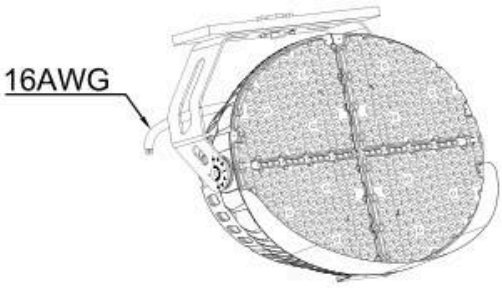

(4)Connect the AC line,AC line for 16 AWG.

For ordering information, please contact sales@ilighting.com

This is the most common mounting. The luminaire sits on top of mounting structure.

1.Refer to the project Installation Drawings to determine luminaire installation locations and lens type.

2.For each fixture location, install a luminaire that has the correct lens type. Unless otherwise noted, fixtures that share the same lens type are identical.

3.Remove the clear protective film from the front of the lenses, if present.

③pole installed

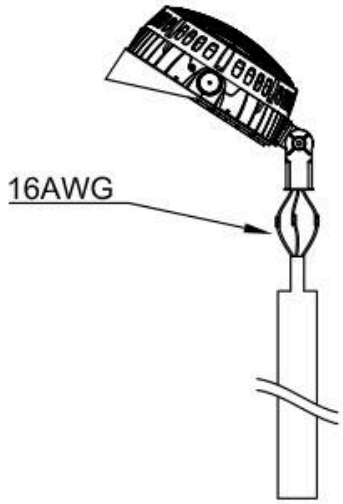

(1)Connect the AC line,AC line for 16 AWG.

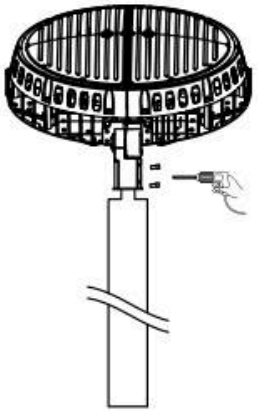

(2)Install the fixture on the pole.

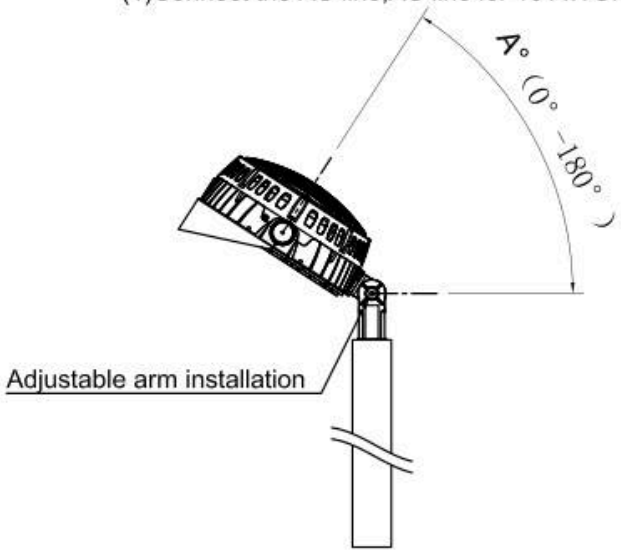

(3)Adjust the Angle and Lock the screw.

For ordering information, please contact sales@ilighting.com

④ Installation of multiple lamps

A.

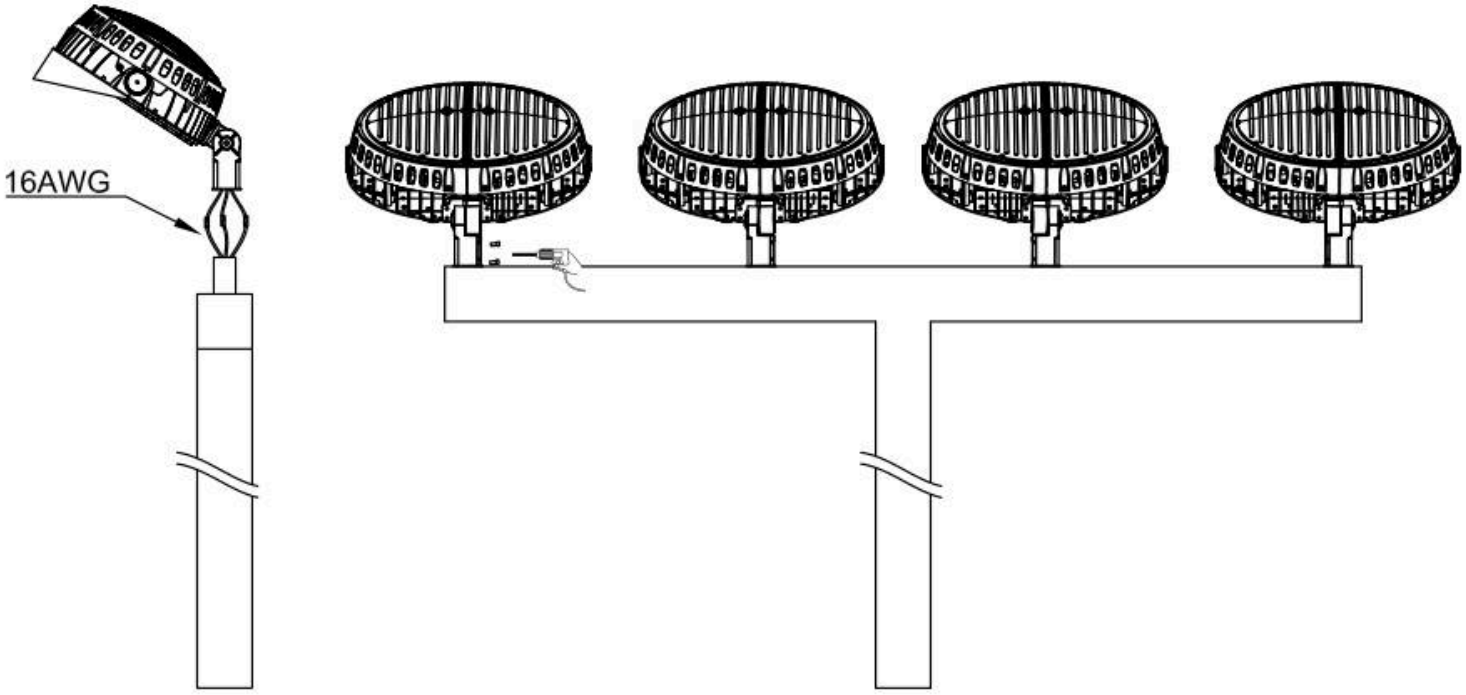

(1)Connect the AC line,AC line for 16 AWG.

(2)Install the fixture on the pole.

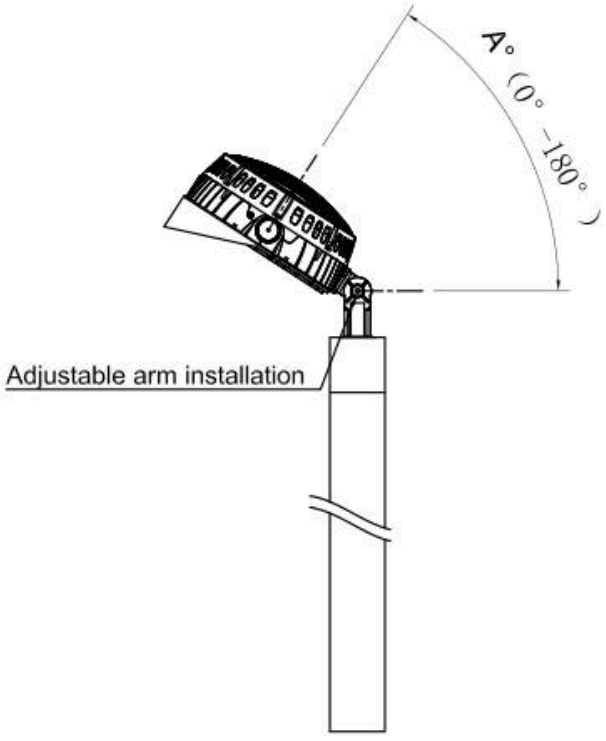

(3)Adjust the Angle and Lock the screw.

For ordering information, please contact sales@ilighting.com

B.

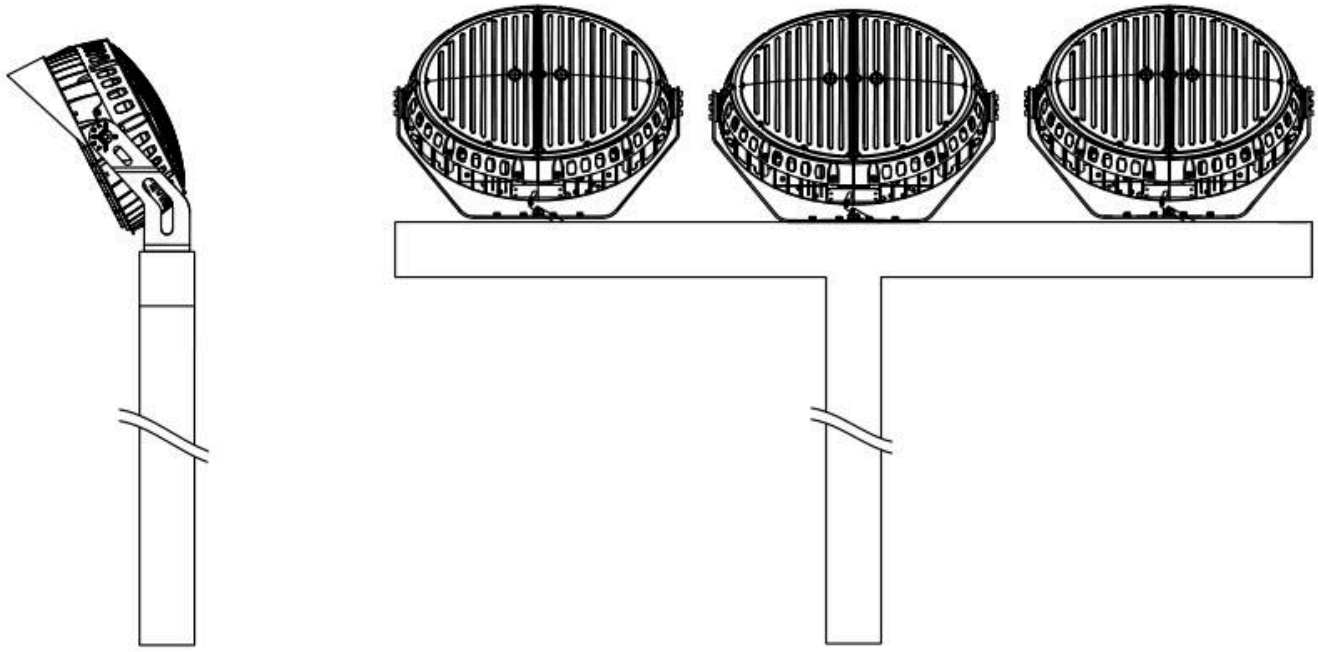

(1)Connect the AC line,AC line for 16 AWG.

(2)Install the fixture on the pole.

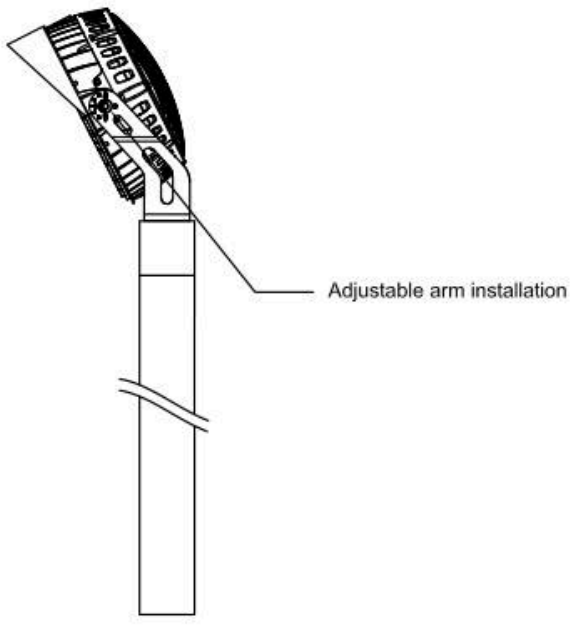

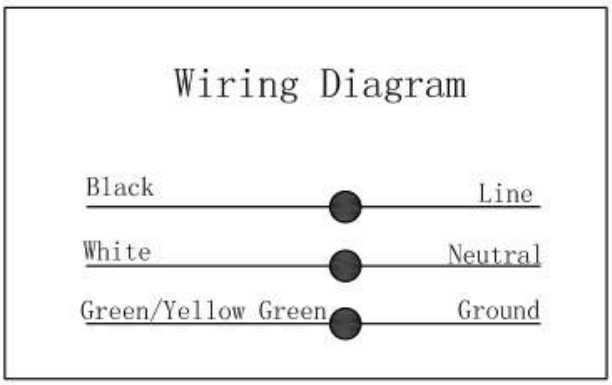

(3)Adjust the Angle and Lock the screw.

For ordering information, please contact sales@ilighting.com

3.WARNING

— It is the responsibility of the installer to verify that all proposed mounting structures including poles, cross arms, catwalk brackets, and other mounting structures are certified to support the weight of the luminaires, withstand wind loads, and meet all other applicable codes and regulations. FAILURE TO FOLLOW THIS WARNING MAY LEAD TO DEATH, SEVERE INJURY, OR PROPERTY DAMAGE.

— Do not suspend any luminaire by electrical or control wires, as these will not support the weight of the fixture, resulting in the potential for the fixture to fall and cause damage or injury. FAILURE TO FOLLOW THIS WARNING MAY LEAD TO DEATH, SEVERE INJURY, OR PROPERTY DAMAGE.
— An impact driver may be used on mounting hardware while the power is off, but NEVER use any power tools on the fixture while the power is on.The
vibration caused by power tools may damage the fixture. FAILURE TO FOLLOW THIS WARNING MAY LEAD TO LUMINAIRE INTERNAL DAMAGE
AND FAILURE
— Mounting hardware shall be stainless steel or other high-strength, corrosion-resistant material. Length of Hex bolt shall be determined in the field.
size the bolt appropriately to allow secure fastening of the luminaire to the mounting structure.

4. Power wiring

Incoming power cable shall be SOOW style 3C cable with a minimum of 16AWG annealed stranded bare copper per ASTM B-174 with a minimum temperature range of -40°C to +90°C. Cable must be water resistant, UV rated/sunlight resistant, UL listed and CSA certified for indoor and outdoor use. International applications shall be harmonized (HAR) or IEC equivalent.
3NEVER connect the fixture's green insulation (GROUND) wire to the black (LINE) current-carrying or white (NEUTRAL) supply wire, as this could energize the metal housing and create the risk of electrical shock. FAILURE TO FOLLOW THIS WARNING MAY LEAD TO DEATH, SEVERE INJURY, OR PROPERTY DAMAGE.

5.WARNING

— Do not damage or cut the wire insulation (covering) during installation. Do not permit wires to contact any surface having a sharp edge, as this may damage the wire insulation and create the risk of electrical shock. FAILURE TO FOLLOW THIS WARNING MAY LEAD TO DEATH, SEVERE INJURY, OR PROPERTY DAMAGE.
— Always turn power to fixture OFF before performing any work on control wiring.Turn transmitters off before working on main control lines. Performing any work on control connections while fixtures are receiving the signal may result in transient or fluttering control signals which can cause damage to the luminaire. FAILURE TO FOLLOW THIS WARNING MAY LEAD TO LUMINAIRE INTERNAL DAMAGE AND FAILURE.
— Never connect the luminaire to an electrical system that is not grounded. Installing a luminaire in an ungrounded electrical system could allow the metal housing to become energized in the event of an electrical short, resulting in the risk of electrical shock for anyone who comes into contact with the fixture. FAILURE TO FOLLOW THIS WARNING MAY LEAD TO DEATH, SEVERE INJURY, OR PROPERTY DAMAGE.

6.Label the Luminaires (If Required)

For outdoor applications where smaller groups of luminaires are installed on poles, it is not necessary to label the fixtures. If you are installing fixtures on poles or other applications where labeling is not required, skip this step
For indoor applications where many luminaires are installed in a row along a catwalk, the fixtures are typically labeled to facilitate
identifying each one at a glance from the catwalk.
1.Label each fixture with Luminaire Number as indicated on schedules in the project Installation drawings.
2.Labels shall be white background with black lettering. Text shall be at least 1/4" (6mm) tall.
3.Affix the label to the mounting bracket in a prominent location, avoiding manufacturer labels.

For ordering information, please contact sales@ilighting.com

7.TIPS

①

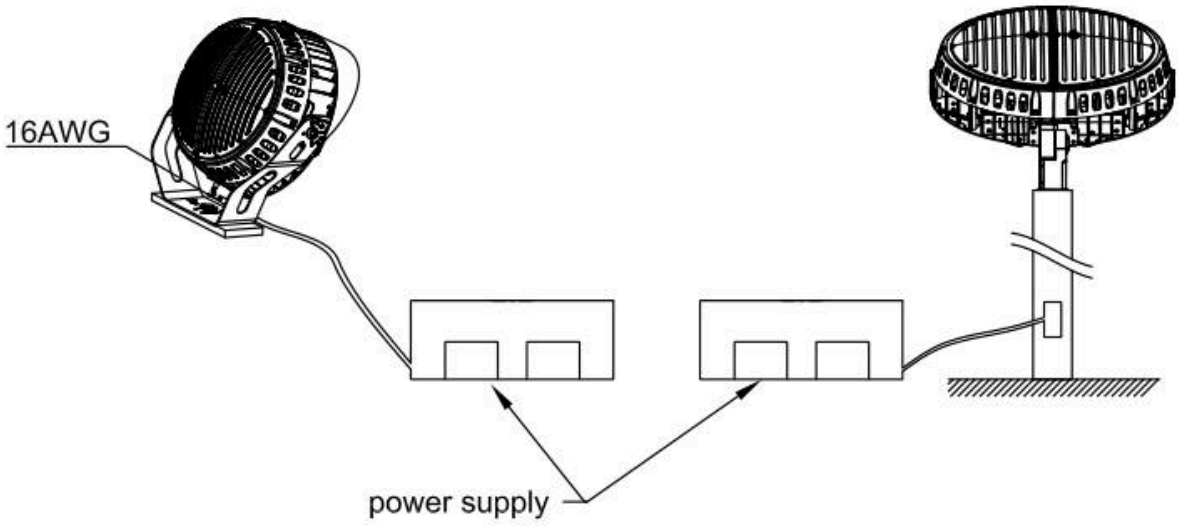

You can take out the power supply from the lamp body, extend the power output line, put the power supply in the power box.

②

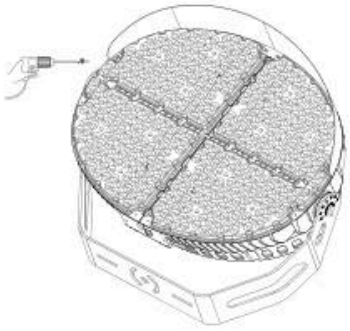

Take the lamp out of the carton and fix the reflective cover as shown in the picture.

③

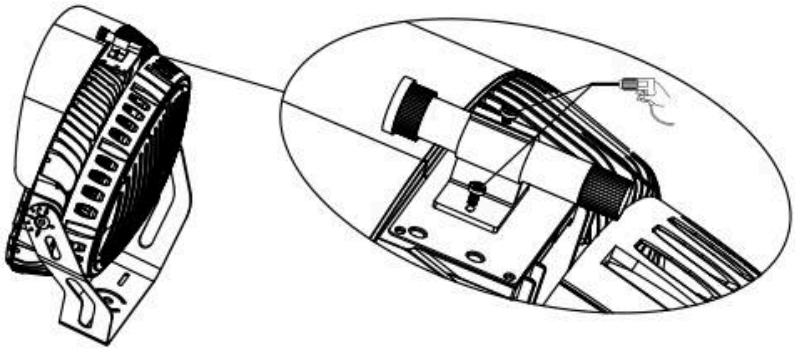

Take out the laser sight and fixing bracket and fix it as shown in the figure.

8.If there are more birds in the local area, customers can also choose to install anti-bird devices according to their needs.

For ordering information, please contact sales@ilighting.com