LED Emergency Exit Sign

WSD LED INC
Green Lighting Resources

TYPE: CR-7037R;CR-7037G

LED Emergency Exit Sign accord with US STANDARD - Injection-molded, flame-retardant and high impact thermoplastic housing.This exit sign with design is great for placing on doorways, isles, restaurant, office building and warehouses.



CR-7037R



CR-7037G

Standard:Double-Face free parts in package

SPECIFICATION	
TYPE	CR-7037R / CR-7037G
WORKING VOLTAGE	120V / 277V 50Hz/60Hz
EFFICACY	0.86
POWER CONSUMPTION	4 W
INPUT CURRENT	100mA
RECHARGE TIME	24 Hours
OUTPUT WATTAGE	1W
EMERGENCY DURATION	≥90 Mins
BATTERY	1.2V
FACTORY SETTING	Double-Face free parts in package
ENVIRONMENT	DAMP
WORKING TEMPERATURE	0°C ~ 40°C
CERTIFICATION	UL
CABLE	Input Connect, No cable
WARRANTY	2 year limited

DIMENSION:

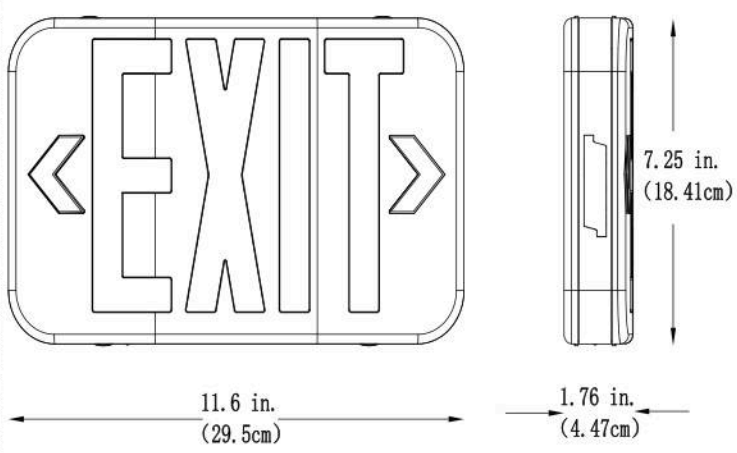

WATTAGE	CR-7037R / CR-7037G
NT. WEIGHT	1.77 lbs(N.W)
BOX DIM.	12.05" x 7.48" x 2.36"(1Pcs/CTN)
OUTER BOX	15.35" x 12.4" x 12.79"(10Pcs/CTN)

LED Emergency Exit Sign

WSD LED INC
Green Lighting Resources

TYPE: CR-7037R;CR-7037G

ORDERING INFORMATION

EXAMPLE:

CR-7037R / CR-7037G

CR	7037	R
CODE	CODE	FINISH
WSD LED	**7037** Product Code	**G**(Green) **R**(Red)

ACCESSORIES (Standard)



CR-7037R / CR-7037G



Blank panel

WIRING DIAGRAM:

CR-7037R / CR-7037G

Make the proper supply wire connections.
If using 120VAC, connect the black and White wires to the building utility.
If using 277VAC, connect the Orange and White wires to the building utility.

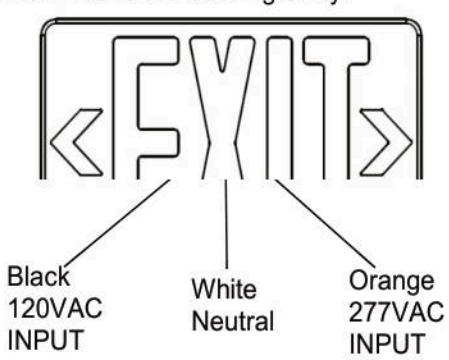

LED Emergency Exit Sign

TYPE: CR-7037R;CR-7037G

Mounting Instructions

NOTE: First turn off electricity.

1.Remove mounting plate from fixture.



2.Knockout in back of mounting plate and push wires through the hole.

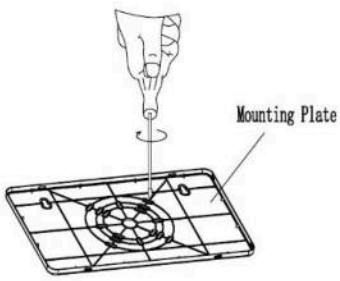

3.Securely attach mounting plate to J-box (not provided).

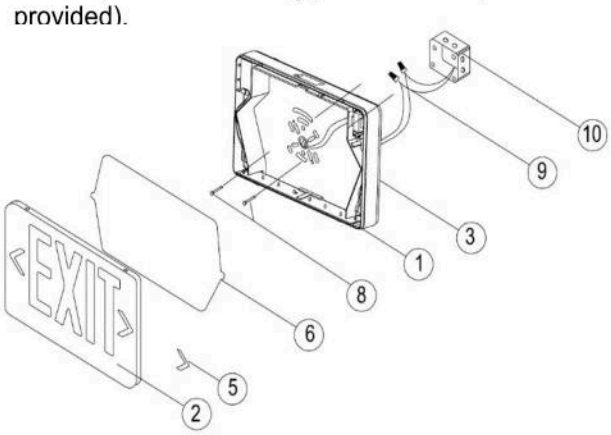

4.ELECTRICAL CONNECTIONS

Make the proper supply wire connections.

If using 120VAC, connect the black and White wires to the building utility.

If using 277VAC, connect the Orange and White wires to the building utility.

