LED Emergency Light

WSD LED INC
Green Lighting Resources

TYPE: EM110,EM114,EM119

LED Emergency Light accord with US STANDARD - Injection-molded, flame-retardant and high impact thermoplastic housing. 120V/277V AC universal voltage operation.This exit sign with design is great for placing on doorways, isles, restaurant, office building and warehouses.







Intertek 5005344

2 YEAR

EM110

EM114
Standard:Double-sided display

EM119
Standard:Single side display

PRODUCT DISPLAY:



EM110

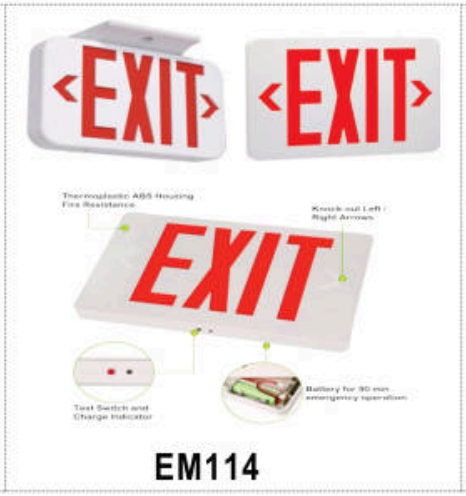

EM114



EM119

SPECIFICATION			
TYPE	WSD-EM110	WSD-EM114	WSD-EM119
WORKING VOLTAGE	120-277V 50Hz/60Hz	120V / 277V 50Hz/60Hz	120V / 277V 50Hz/60Hz
EFFICACY	0.97	0.86	
INPUT WATTAGE	4.5W	5W	
INPUT CURRENT	0.03A	0.04A	
RECHARGE TIME	24 Hours		
OUTPUT WATTAGE	2W	1W	2W
EMERGENCY DURATION	≥90 Mins		
BATTERY	3.6V 600 mA h	1.2V 800 mA h	3.6V 1000 mA h
LUMEN	300lm	NONE	250lm
ENVIRONMENT	DAMP		
WORKING TEMPERATURE	5°C ~ 30°C		
CERTIFICATION	ETL		
CABLE	Input Connect, No cable		
WARRANTY	2 year limited		

LED Emergency Light

WSD LED INC
Green Lighting Resources

TYPE: EM110,EM114,EM119

DIMENSION:

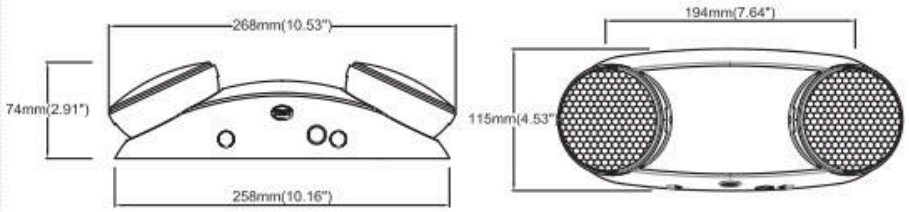

WATTAGE	WSD-EM110
NT. WEIGHT	
OUTER BOX	34.5" x 11.4" x 10.2"(20Pcs/CTN)

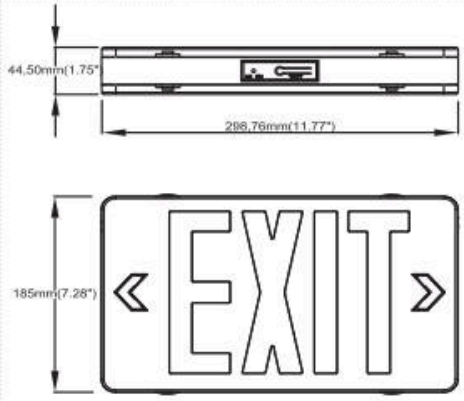

WATTAGE	WSD-EM114
NT. WEIGHT	1.72 lbs(N.W)
OUTER BOX	24.4" x 12.6" x 15.8"(20Pcs/CTN)

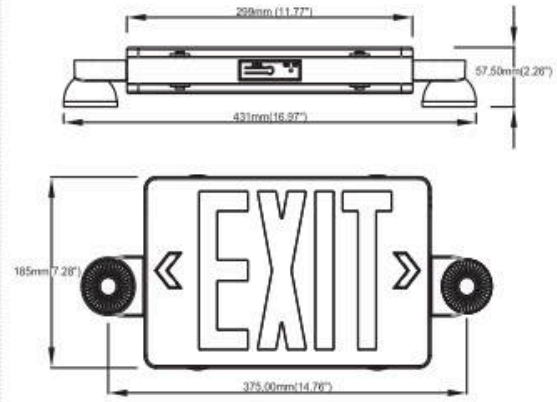

WATTAGE	WSD-EM119
NT. WEIGHT	2.07 lbs(N.W)
OUTER BOX	15.4" x 12.6" x 15.8"(10Pcs/CTN)

ORDERING INFORMATION

EXAMPLE:

WSD-EM110 / WSD-EM114 / WSD-EM119

WSD	EM	110	ZG
COMPANY	PRODUCT	CODE	FINISH
WSD LED INC	**EM** Emergency Light	**110/114/119** Product Code	**ZG**(Green) **ZR**(Red) **(There are only 114 and 119 products)**

LED Emergency Light

WSD LED INC
Green Lighting Resources

TYPE: EM110,EM114,EM119

ACCESSORIES (Standard)



EM110

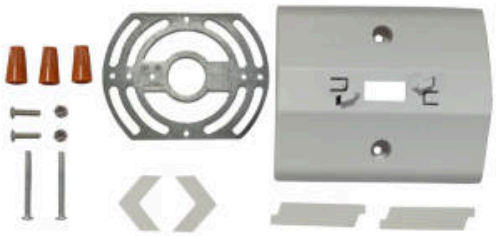

EM114/EM119

WIRING DIAGRAM:

EM110

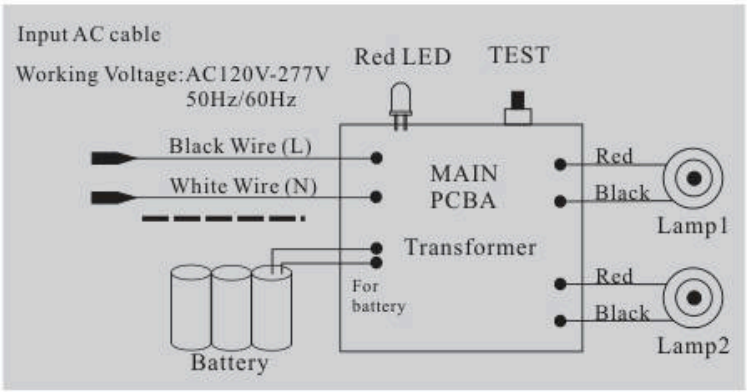

EM114

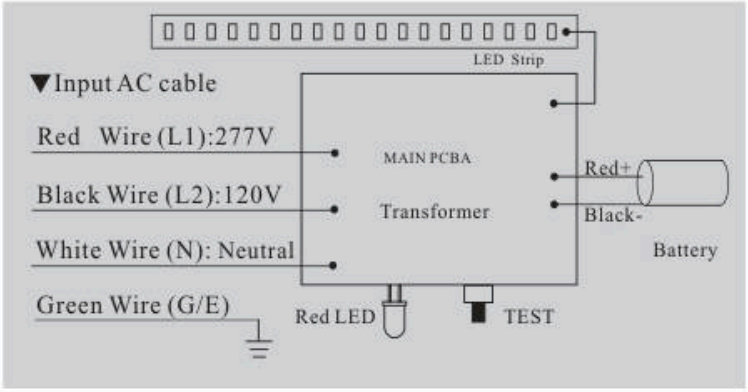

EM119

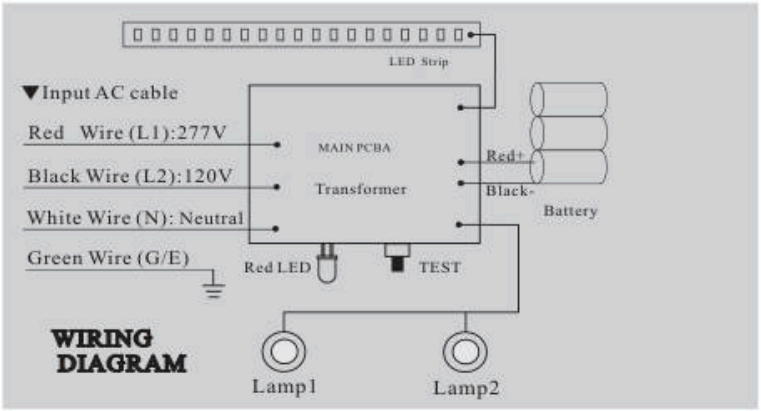

TYPE: EM110,EM114,EM119

INSTRUCTIONS :

WSD-EM110:

INSTALLATION(J-BOX MOUNTING):

1 Feed fixture leads through main bottom case and connect AC power supply (Fig A).
2 Connect wires through J-Box .Place bottom case on J-Box and secure with screws.
3 Connect battery only when continuous AC power can be provided to the unit(Fig B) .
4 Align snaps and push housing directly onto main bottom case (Fig C) apply continuous AC power and press "TEST" button to check lamps.

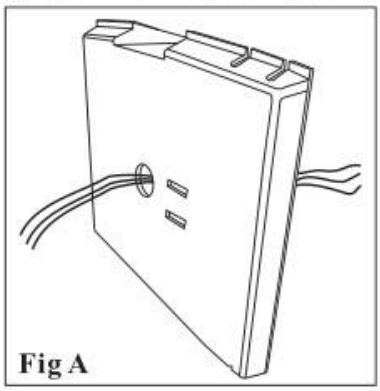
Fig A

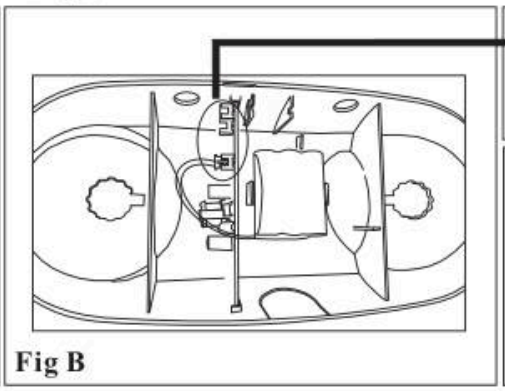
Fig B

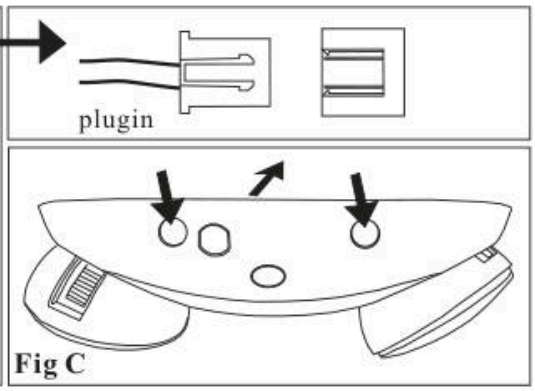

Fig C

WARNING:
Unused wires must be capped using using enclosed wire nuts.

LED Emergency Light

TYPE: EM110,EM114,EM119

WSD-EM119:

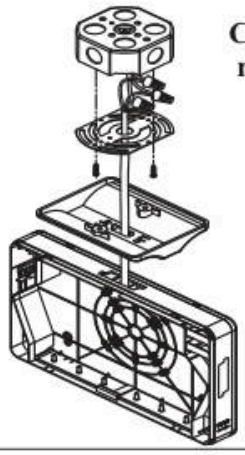

Ceiling mount

1

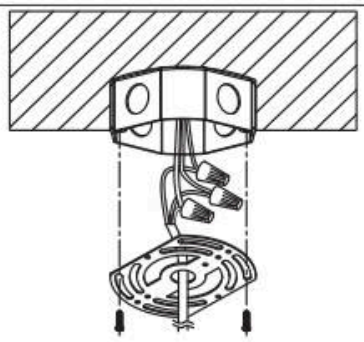

2

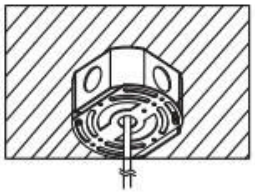

1.Using the junction box screws to mount spider plate onto junction box.

1.Using a flat screwdriver, open the front cover ,remove and discard the canopy kit.
2.Feed excess wires into the junction box.
3.The system can accept input voltages of 120 VAC or 277 VAC.Therefore, connect the black/red wire (line voltage) and the white wire (neutral) leads to the building utility. Connect the green ground.

3

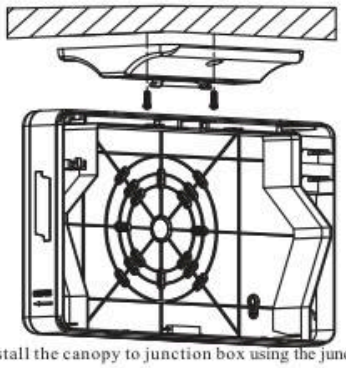

1.Install the canopy to junction box using the junction box screws.

4

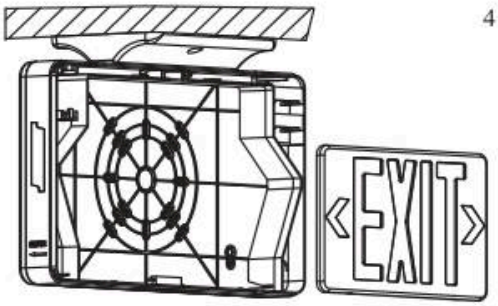

1.Mount the unit securely to the canopy.
2.Snap the EXIT plate to the unit.

5

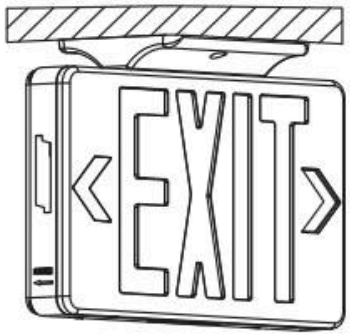

Side mount

1

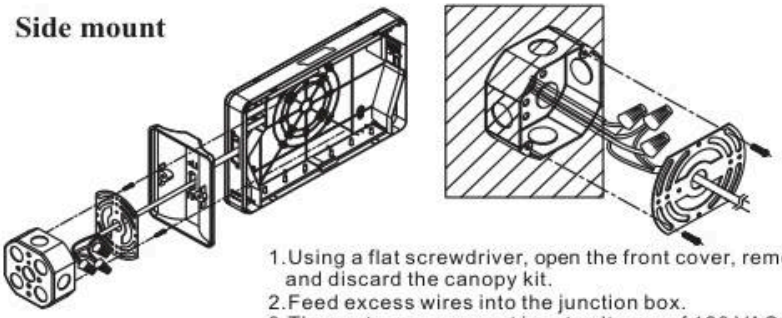

1.Using a flat screwdriver, open the front cover, remove and discard the canopy kit.
2.Feed excess wires into the junction box.
3.The system can accept input voltages of 120 VAC or 277 VAC. Therefore, connect the black/red wire (line voltage) and the white wire (neutral) leads to the building utility. Connect the green ground.

2

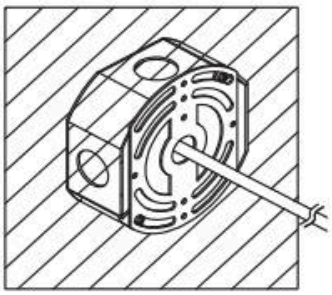

1.Using the junction box screws to mount spider plate onto junction box .

3

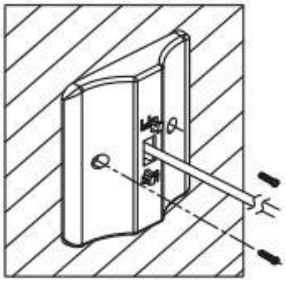

1.Insert the canopy onto the location where the mounting hole cover was removed

4

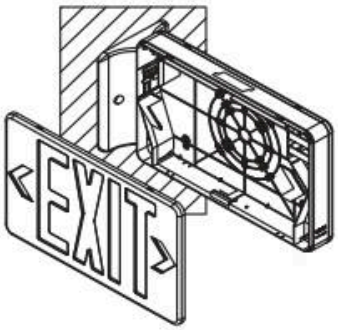

Mount the unit securely to the canopy

5

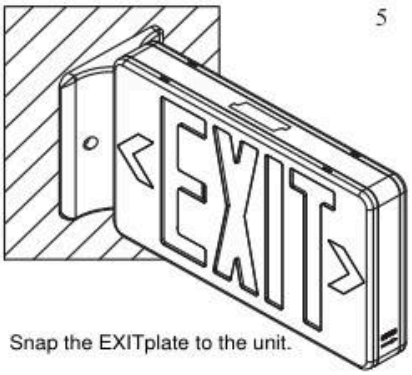

Snap the EXITplate to the unit.

LED Emergency Light

WSD LED INC
Green Lighting Resources

TYPE: EM110,EM114,EM119

WSD-EM119:

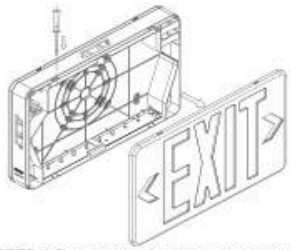

STEP 1 Remove the face cover by gently prying it open with a flat screwdriver.

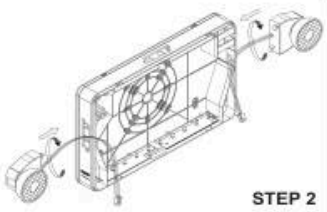

STEP 2
Pass the wires through the lamp mounting holes of housing. Insert lamp heads into housing and twist them to lock firmly.

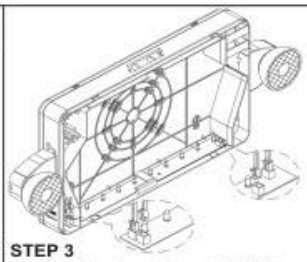

STEP 3
Connect the wires of lamp into PCB terminal as per drawing.

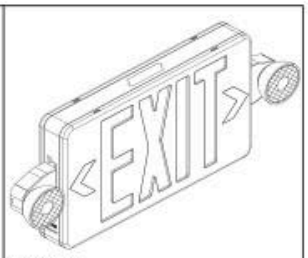

STEP 4
Install back the face cover.

INSTALLATION DIAGRAM

1 **Wall mount**

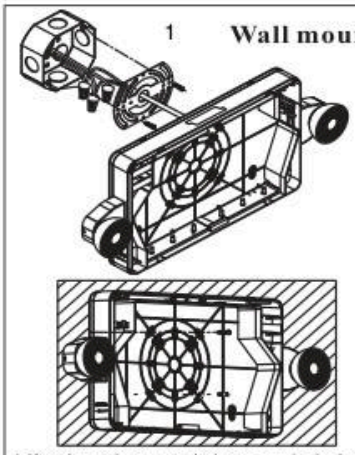

1.Knock out the proper hole pattern in the back plate to mount to a standard junction box. Place a support on either side of the knockouts to be removed and then knoc out with a screwdriver.

2

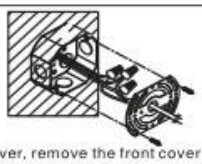

1.Using a flat screwdriver, remove the front cover ,remove and discard the canopy kit.
2.Feed excess wires into the junction box.
3.The system can accept input voltages of 120 VAC or 277 VAC. Therefore, connect the black/red wire (line voltage) and the white wire (neutral) leads to the building utility. Connect the green ground.

3

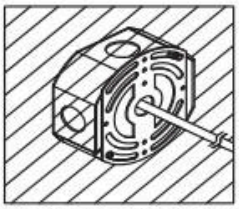

1.Using the junction box screws to mount spider plate onto junction box.

4

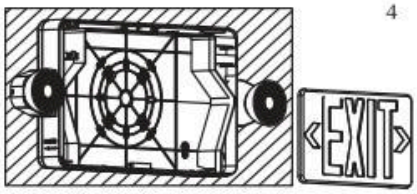

1.Mount the unit securely to the junction box using the junction box screws.
2.Snap the EXIT plate to the unit.

5

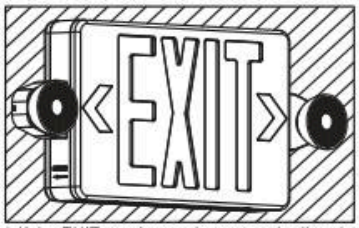

1.If the EXIT needs to point to certain direction, arrow could be removed.

Ceiling mount

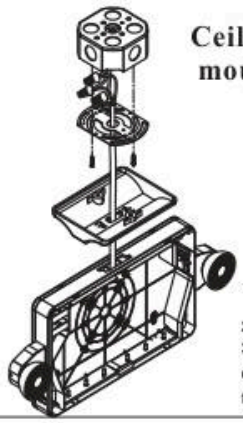

1

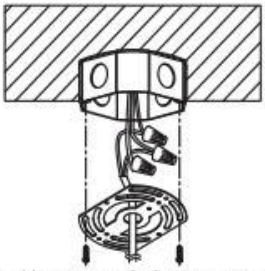

1.Using a flat screwdriver, remove the front cover, remove and discard the canopy kit.
2.Feed excess wires into the junction box.
3.The system can accept input voltages of 120 VAC or 277 VAC. Therefore connect the black/red wire (line voltage) and the white wire (neutral) leads to the building utility. Connect the green ground.

2

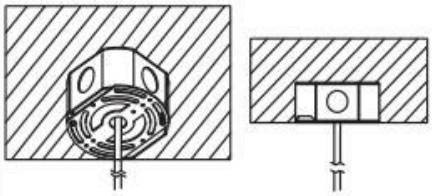

1.Using the junction box screws to mount spider plate onto junction box.

3

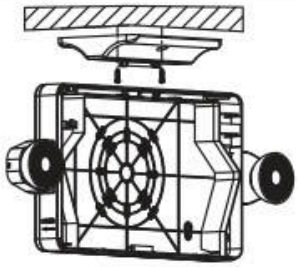

1.Install the canopy to junction box.

4

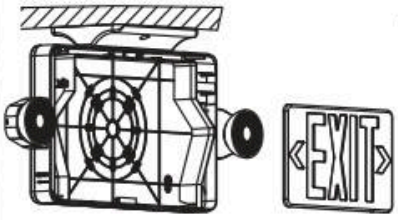

1.Mount the unit securely to the canopy.
2.Snap the EXIT plate to the unit.

5

