Selectable LED Linear High Bay

Installation Guide

⚠ WARNING

- Turn power off before inspection, installation or removal.
- The installation should be performed by qualified electricians or lighting technicians.
- Before conducting any installation, maintenance, or removal, disable all power to the luminaries and wait until the fixture cool down.
- Do not touch the fixture while it is in service.
- If there is any problem with the fixture, DO turn off power and DO NOT attempt repair unless you are a qualified technician or the customer service member.
- This product is not available for several special environments, such as places with corrosive gas liquids or high pressure water vapor.

Steel Rope Mounting (Default)

Note: Inspect the fixture and accessories (especially the installation location) for damage before installing.

1. Insert the anti-stripping piece of the steel rope into the installation hole of the fixture.
2. Make the electrical connections according with the wiring diagram (Check the label information to ensure that the line voltage is within the available range of the fixture).
3. Push all wires back into housing. Be careful not to pinch wires. Secure flex conduit to access Plate.
4. (optional) Select the appropriate power and color temperature in the actual application of the sliding dip switch, as shown in the following figure.

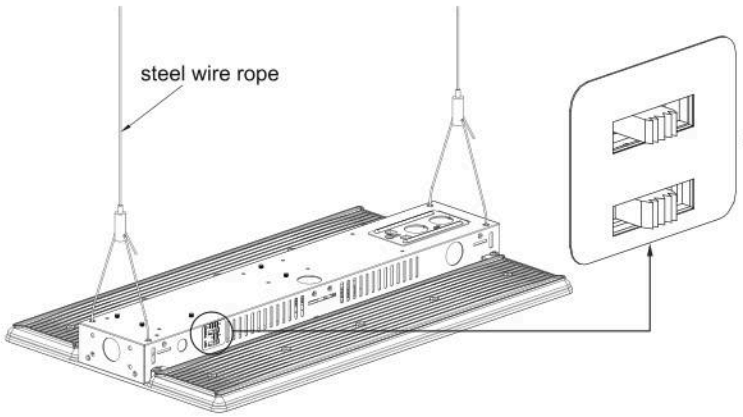

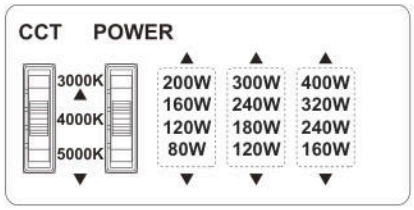

Please refer to the specific model for the power adjustment range.

Surface Mounting (Optional)

1. Fix the surface mount bracket with screws (Note that the distance between the two surface mount brackets is within the specified range).
2. Make the electrical connections according with the wiring diagram (Check the label information to ensure that the line voltage is within the available range of the fixture).
3. Push all wires back into housing. Be careful not to pinch wires. Secure flex conduit to access Plate.
4. Install the fixture to the mount surface with screws.

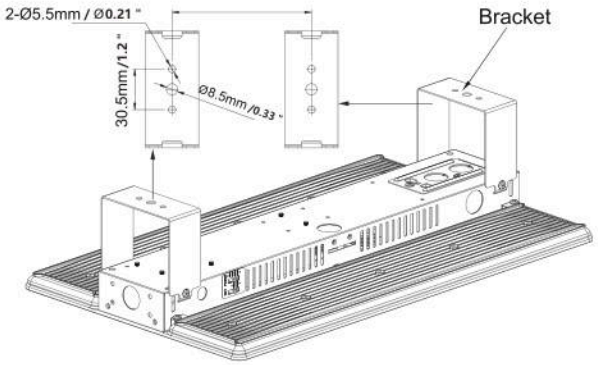

Conduit Pendant (Optional)

1. Attach pendant junction box to 3/4" threaded conduit (supplied by others) with locknuts.
2. Snapping fixture housing into bracket. Ensure fixture is balanced. Secure with 4pcs BM4*6 screws.
3. Pull supply wires through side knockout and feed supply wires through flex conduit. Make the electrical connections according with the wiring diagram (Check the label information to ensure that the line voltage is within the available range of the fixture).
4. Secure flex conduit to side panel and secure side panels with screw. Push all wires back into housing. Be careful not to pinch wires. Secure flex conduit to access Plate.

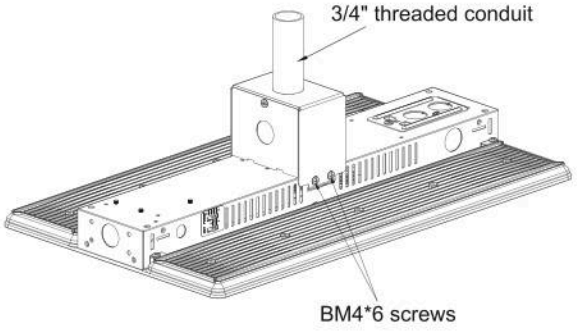

CLEANING & MAINTENANCE

CAUTION: Be sure fixture temperature is cool enough to touch.
Do not clean or maintain while fixture is energized.

TROUBLESHOOTING

1. Check that the line voltage at the fixture is correct.
   Refer to wiring directions.
2. Make sure the fixture grounded properly.

WIRING DIAGRAM

For dimming version, please check wiring diagram below.

WITHOUT EMERGENCY BATTERY

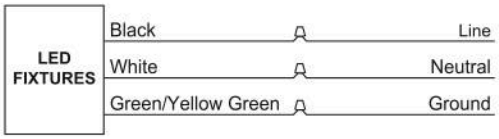

WITH EMERGENCY BATTERY

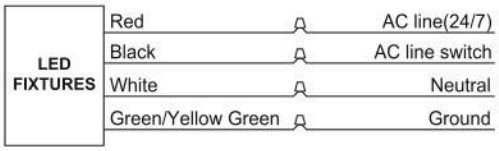

ACCESSORY LIST

Type	Accessory Name	Accessory Model	Quantity
Chain and bracket kit	Aircraft Cable	1.5x1500mm, A set of aircraft cable(with each 150mm long)	2
Surface Mounting	Bracket	LHB_SMK_210W_L88W40H82.5T1.2	2
	Screw	BM4*6	4
Conduit Pendant	Bracket	LHB_PMK_LID_210W_L88W60H82T1.2	1
	Bracket	LHB_PMK_LID_300W_L84.4W66T0.5	2
	Screw	BM4*6	6