Wet Location LED Exit Sign

TYPE: CR-7110

Wet Location LED Exit Sign accord with US STANDARD - Injection-molded, flame-retardant and high impact thermoplastic housing.This exit sign with design is great for placing on doorways, isles, restaurant, office building and warehouses.



CR-7110

PRODUCT DISPLAY:

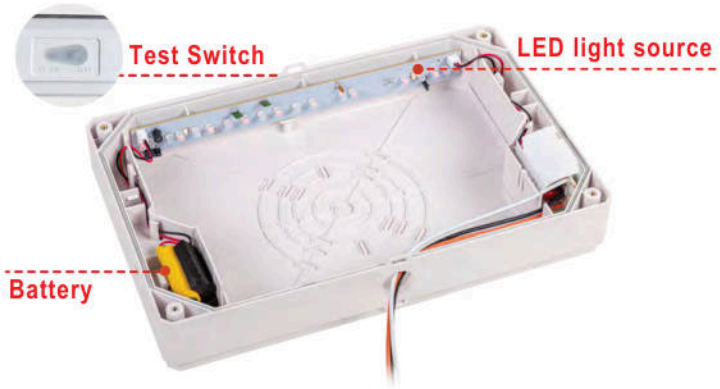

CR-7110



CR-7110

SPECIFICATION	
TYPE	CR-7110
WORKING VOLTAGE	120 / 277V 60Hz
INPUT RATING	2.0W 150mA
FACTORY SETTING	Double-Face free parts in package
BATTERY	3.6V NiCad Battery
COLOUR	Red, Green Color In One
EMERGENCY DURATION	90 Mins
RECHARGE TIME	24 Hours
PROTECTION LEVEL	Wet Locations / IP65
OPERATION TEMPERATURE	0ºC ~ 40ºC
CERTIFICATION	UL
FINISH	White
DIMENSION	320X64X205mm
CABLE	Input Connect, No cable
WARRANTY	2 year limited

Wet Location LED Exit Sign

TYPE: CR-7110

DIMENSION:

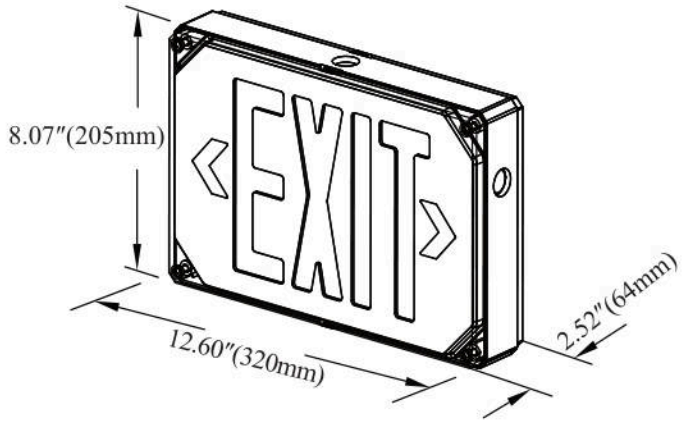

WATTAGE	CR-7110
NT. WEIGHT	2.65 lbs
BOX DIM.	8.39" X 3.66" X 12.87"
OUTER BOX	19.21" x 17.32" x 13.58"(10Pcs/CTN)

ORDERING INFORMATION

EXAMPLE:

CR-7110

CR	7110
CODE	CODE

LBS Lighting **7110** Product Code

WIRING DIAGRAM:

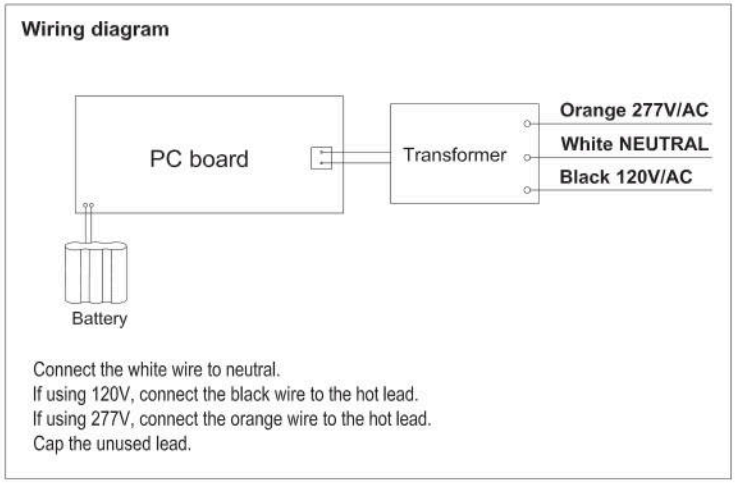

PRODUCT ACCESSORIES: (Standard)

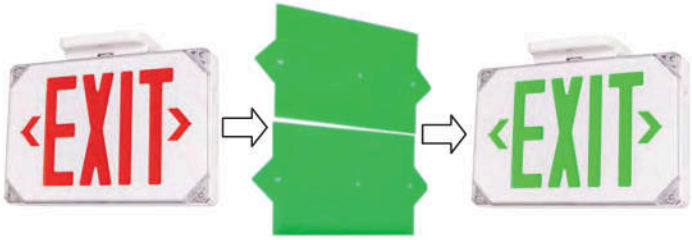

EXTRA TWO GREEN FILMS TO BE GREEN EXIT SIGN



EXTRA ONE FOR DOUBLE SIDE

MOUNTING ACCESSORIES: (Standard)





Wet Location LED Exit Sign

TYPE: CR-7110

INSTRUCTIONS :

Open front cover

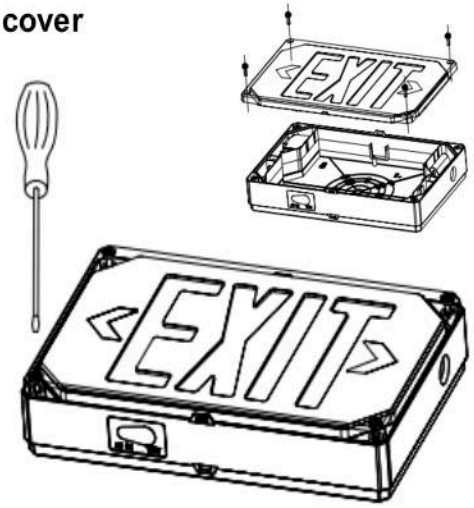

Fig 1

Wall mount : See "Important Safeguards" for installations in outdoor applications

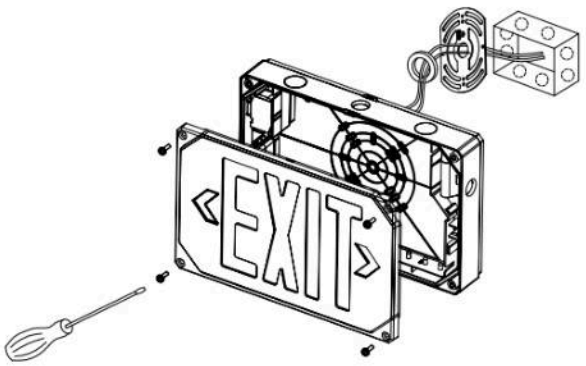

Fig 2

Side mount : See "Important Safeguards" for installations in outdoor applications

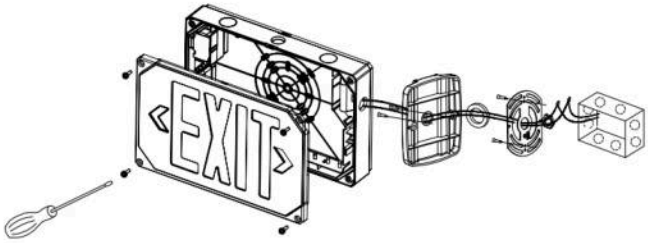

Fig 3

Ceiling mount : See "Important Safeguards" for installations in outdoor applications

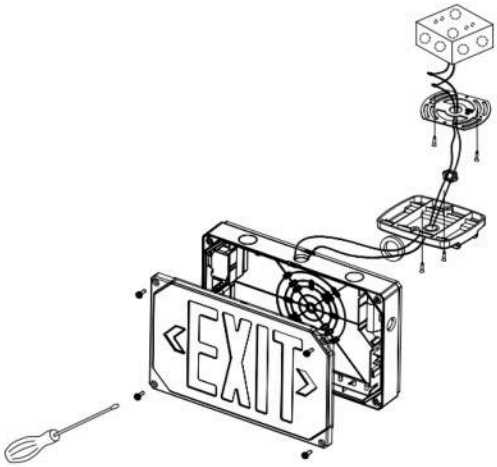

Fig 4

Canopy assembly

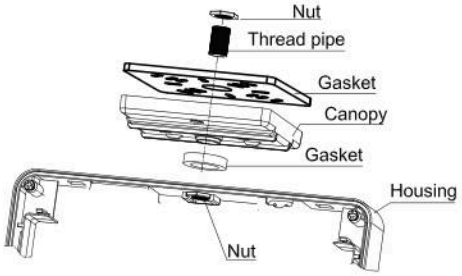

Fig 5

Use provided thread pipe and 2 nut fix canopy on unit, put gasket between unit and canopy.