# LED Emergency Exit Sign

WSD LED INC
Green Lighting Resources

## TYPE: CR-7037RG

LED Emergency Exit Sign accord with US STANDARD - Injection-molded, flame-retardant and high impact thermoplastic housing.This exit sign with design is great for placing on doorways, isles, restaurant, office building and warehouses.




**CR-7037RG**

Standard:Single side display and Double-sided display

| SPECIFICATION | |
|---|---|
| TYPE | CR-7037RG |
| WORKING VOLTAGE | 120V / 277V 50Hz/60Hz |
| EFFICACY | 0.86 |
| POWER CONSUMPTION | 4 W |
| INPUT CURRENT | 100mA |
| RECHARGE TIME | 24 Hours |
| OUTPUT WATTAGE | 1W |
| EMERGENCY DURATION | ≥90 Mins |
| BATTERY | 1.2V |
| FACTORY SETTING | Single-sided red display |
| ENVIRONMENT | DAMP |
| WORKING TEMPERATURE | 0°C ~ 40°C |
| CERTIFICATION | UL |
| CABLE | Input Connect, No cable |
| WARRANTY | 2 year limited |

## DIMENSION:

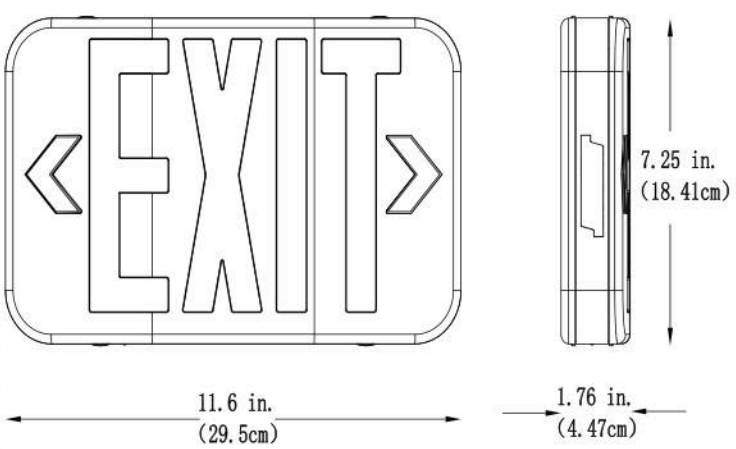


| | |
|---|---|
| WATTAGE | CR-7037RG |
| NT. WEIGHT | 1.77 lbs(N.W) |
| BOX DIM. | 12.05" x 7.48" x 2.36"(1Pcs/CTN ) |
| OUTER BOX | 15.35" x 12.4" x 12.79"(10Pcs/CTN ) |

# LED Emergency Exit Sign

WSD LED INC
Green Lighting Resources

## TYPE: CR-7037RG

### ORDERING INFORMATION

**EXAMPLE:**

**CR-7037RG**

| CR | 7037 | RG |
|---|---|---|
| CODE | CODE | FINISH |
| Company code | **7037** Product Code | **RG**(Green / Red) |

### ACCESSORIES (Standard)




### WIRING DIAGRAM:

### CR-7037RG

Make the proper supply wire connections.
If using 120VAC, connect the black and White wires to the building utility.
If using 277VAC, connect the Orange and White wires to the building utility.

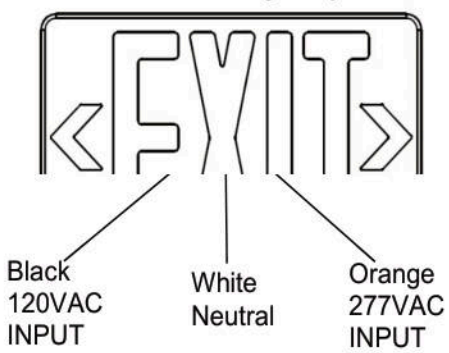

# LED Emergency Exit Sign

WSD LED INC
Green Lighting Resources

## TYPE: CR-7037RG

### Mounting Instructions

**NOTE: First turn off electricity.**

1.Remove mounting plate from fixture.




2.Knockout in back of mounting plate and push wires through the hole.

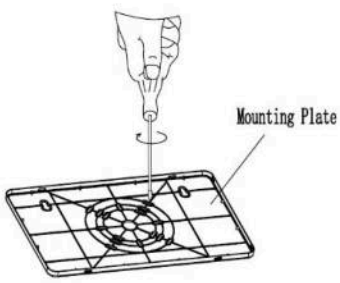


3.Securely attach mounting plate to J-box (not provided).

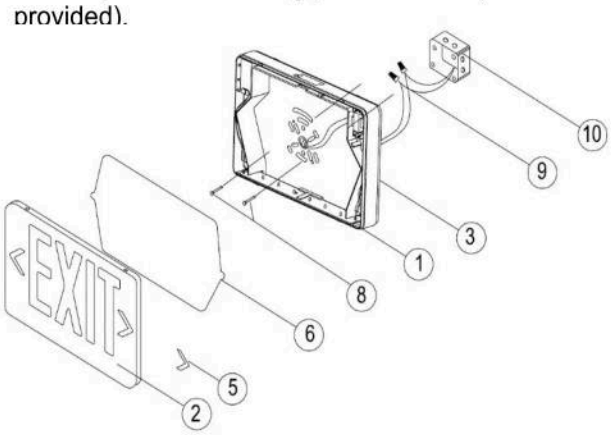


4.ELECTRICAL CONNECTIONS

Make the proper supply wire connections.

If using 120VAC, connect the black and White wires to the building utility.

If using 277VAC, connect the Orange and White wires to the building utility.

