INSTALLATION INSTRUCTIONS FOR EMERGENCY LIGHTING

Package Contents

INCLUDED		
Part	Description	Quantity
1	Emergency Lighting	1
2	Hardware Kit	1



Warnings and Cautions

IMPORTANT SAFEGUARDS
READ AND FOLLOW ALL SAFETY INSTRUCTIONS

1. Review the diagrams thoroughly before beginning.
2. All electrical connections must be in accordance with local codes, ordinances and the National Electric code.
3. Disconnect power at fuse or circuit breaker before installing or servicing.
4. Do not use outdoors.
5. Do not mount in hazardous locations, or near gas or electric heaters.
6. Do not let power cords touch hot surface.
7. Equipment should be mounted in locations and at heights where it will not be subjected to tampering by unauthorized personnel.
8. The use of accessory equipment not recommend by the manufacturer may cause an unsafe condition.
9. Do not use this equipment for other than intended use.
10. All servicing should be performed by qualified personnel only.
11. Allow battery to charge for 24 hours before first use.
12. For connection to a single source of supply such that all lamps are simultaneously illuminated.

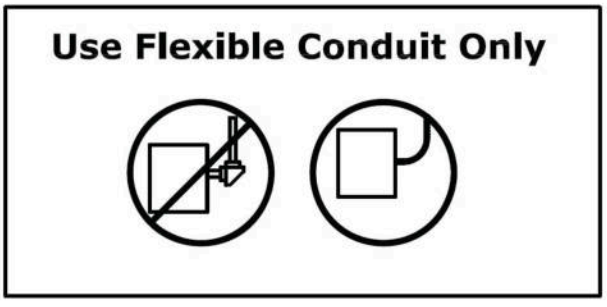

NOTE: First turn off electricity.

Wall Mounting

1. Remove mounting plate from fixture.



2. Knockout in back of mounting plate and push wires through the hole.

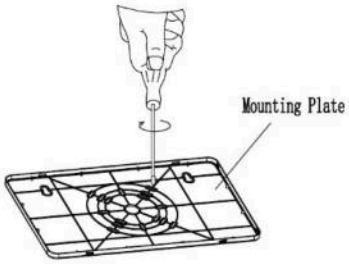

3. Securely attach mounting plate to J-box (not included)

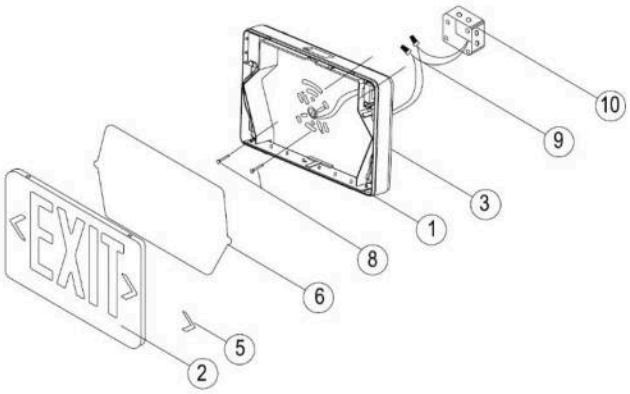

4. ELECTRICAL CONNECTIONS

Make the proper supply wire connections.

If using 120VAC, connect the black and white wires to the building utility.

If using 277VAC, connect the orange and white wires to the building utility.

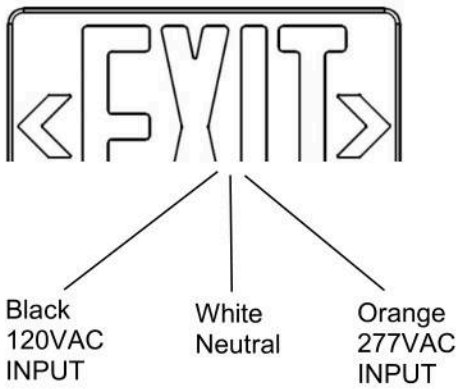

5. Connect the battery to connector on the PCBA.

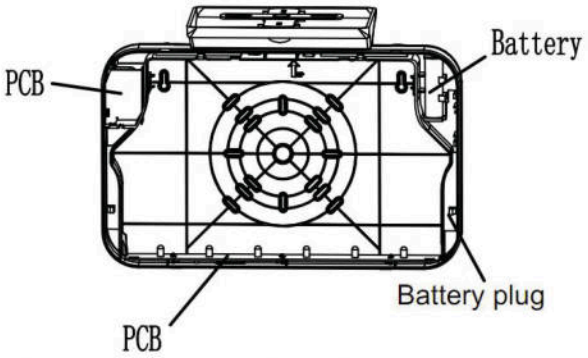

6. Snap fixture onto mounting plate and ensure no wires are pinched. Make sure unit is fully attached.

7. Restore power and press test button. Battery powered LED will come on, AC light will turn off.

Side or Ceiling Mounting

1. Open to cover and knockout on the top of the fixture.
2. Secure the mounting plate tp tube with nut.
3. Push the open cover and knockout on the top of fixture.

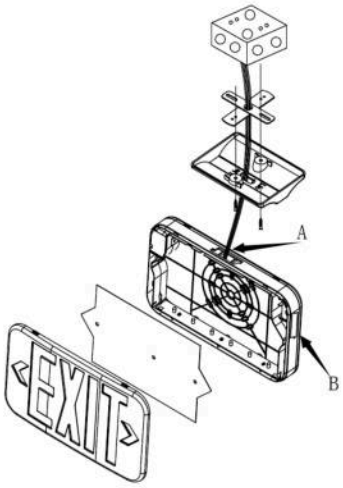

4. Reference step 4-8 in side or ceiling mounting.

Notice: Red and Green Exit Light switchable
1. Initial packing is Red LED Exit
2. Switch to Green LED Exit if necessary

