LED Emergency Light

WSD LED INC
Green Lighting Resources

TYPE: CR-7012 , CR-7108RG , CR-7085RG

LED Emergency Light accord with US STANDARD - Injection-molded, flame-retardant and high impact thermoplastic housing.This exit sign with design is great for placing on doorways, isles, restaurant, office building and warehouses.



CR-7012



CR-7108RG

Standard:
Single side display and
Double-sided display



CR-7085RG

Standard:
Single side display and
Double-sided display

PRODUCT DISPLAY:



CR-7012



CR-7108RG

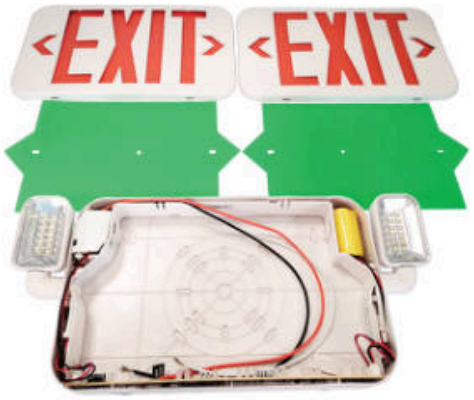

CR-7085RG

SPECIFICATION			
TYPE	CR-7012	CR-7108RG	CR-7085RG
WORKING VOLTAGE	120/277V 50Hz/60Hz	120-347V 50Hz/60Hz	120/277V 60Hz
POWER CONSUMPION	2W max	5W max	2W max
FACTORY SETTING	Standard	Single-sided red display	Single-sided red display
BATTERY	Ni-cad 3.6V 1000mAH	Ni-cad 4.8V 300mAH	Ni-cad 3.6V 1000mAH
OUTPUT WATTAGE	2.5W max	2W max	3W max
LUMEN	184LM	NO	133LM
EMERGENCY DURATION	≥90 Mins		
RECHARGE TIME	24 Hours		
ENVIRONMENT	DAMP		
OPERATION TEMPERATURE	0°C ~ 40°C		
CERTIFICATION	UL 924		
MOUNTING	Wall and Ceiling		
CABLE	Input Connect, No cable		
WARRANTY	2 year limited		

LED Emergency Light

TYPE: CR-7012 , CR-7108RG , CR-7085RG

DIMENSION:

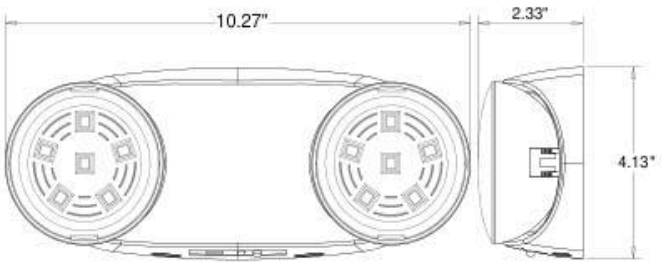

WATTAGE	CR-7012
NT. WEIGHT	0.77 lbs(N.W)
BOX DIM.	4.45" x 3.23" x 10.43"
OUTER BOX	16.92" x 10.83" x 9.45"(10Pcs/CTN)

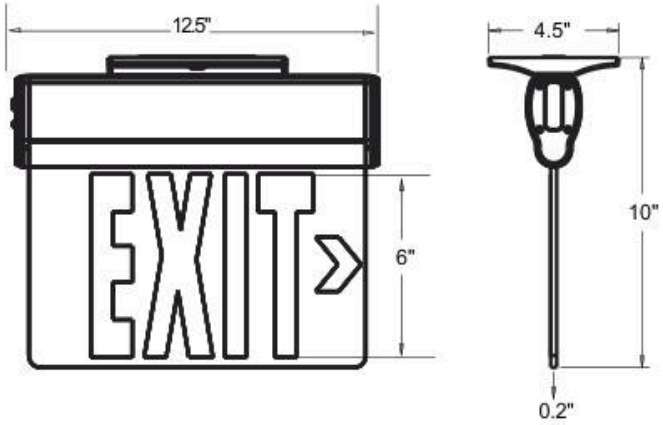

WATTAGE	CR-7108RG
NT. WEIGHT	2.09 lbs(N.W)
BOX DIM.	7.56" x 2.56" x 12.40"
OUTER BOX	15.75" x 13.78" x 12.99"(10Pcs/CTN)

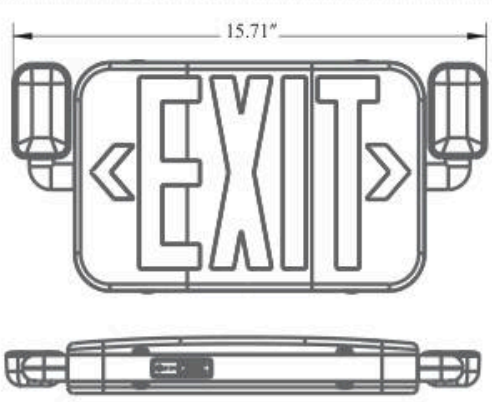

WATTAGE	CR-7085RG
NT. WEIGHT	2.20 lbs(N.W)
BOX DIM.	7.40" x 2.40" x 12.0"
OUTER BOX	12.79" x 12.60" x 15.55"(10Pcs/CTN)

ORDERING INFORMATION

EXAMPLE:

CR-7012 / CR-7108RG / CR-7085RG

CR	7108	RG
CODE	CODE	FINISH
Company code	**7012/7108/7085** Product Code	**RG** (Red / Green) **(There are only 7108 and 7085 products)**

LED Emergency Light

TYPE: CR-7012 , CR-7108RG , CR-7085RG

INSTALLATION ACCESSORIES (Standard)



CR-7012



CR-7108RG



CR-7085RG

WIRING DIAGRAM:

CR-7012

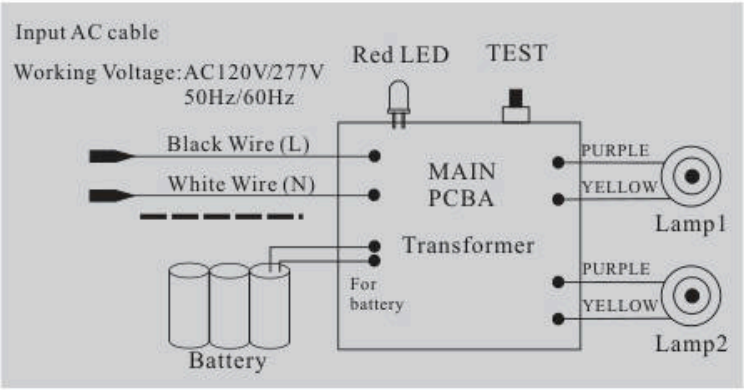

CR-7085RG

Make the proper supply wire connections.

If using 120VAC, connect the black and White wires to the building utility.

If using 277VAC, connect the Orange and White wires to the building utility.

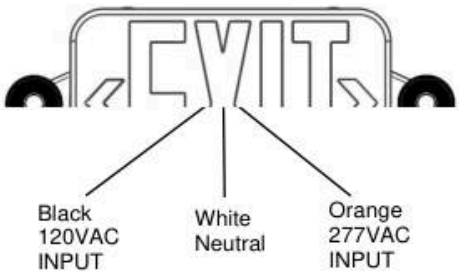

CR-7108RG

ELECTRIAL CONNECTIONS

Make the proper AC wire connections.

Connect the black, white and green wires to the building utility.

Use standard wires nuts to connect to wires.

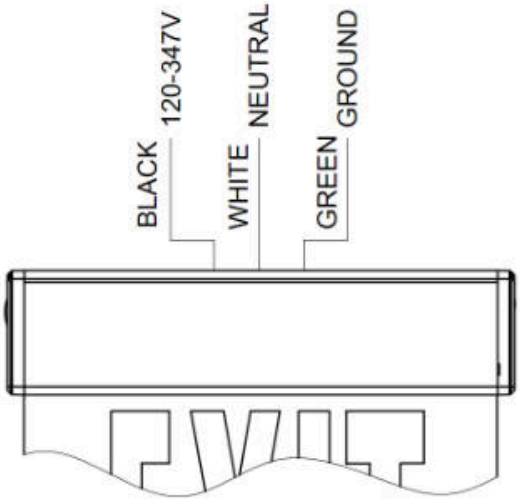

LED Emergency Light

TYPE: CR-7012 , CR-7108RG , CR-7085RG

INSTRUCTIONS :

CR-7012:

INSTALLATION(J-BOX MOUNTING):

1.Remove mounting plate from fixture.

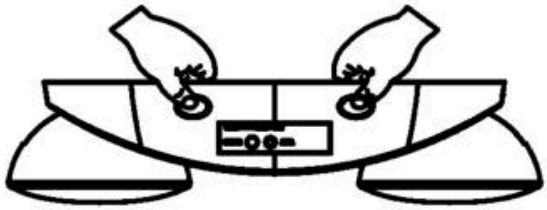

2.Knockout in back of mounting plate and push wires through the hole.

3.Securely attach mounting plate to J-box. Max. mounting height is 7.98ft.

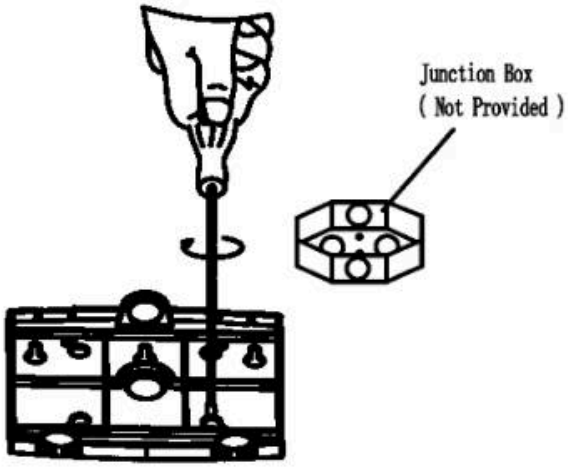

4.ELECTRICAL CONNECTIONS

Make the proper supply wire connections.

Connect the black and white wires to the building utility.

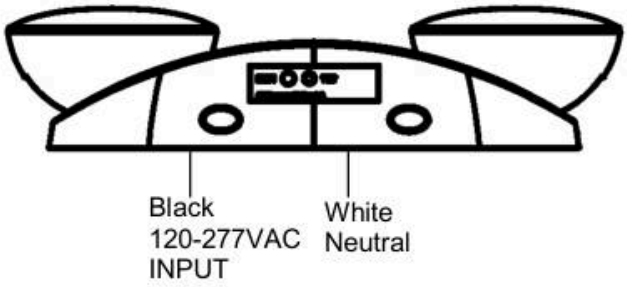

5. Connect the battery to connector on the PCBA.

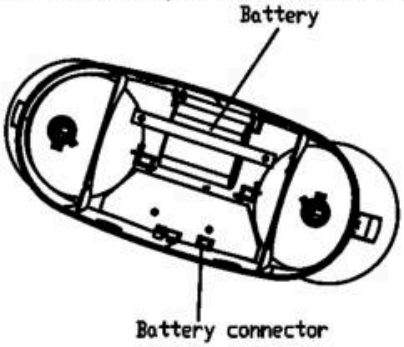

6. Snap fixture onto mounting plate and ensure no wires are pinched. Make sure unit is fully attached.

7. Restore power and press test button. Battery powered LED will come on, AC light will turn off.

Ceiling Mounting

1. Open top cover and knockout on the top of fixture.
2. Secure the mounting plate to tube with nut.

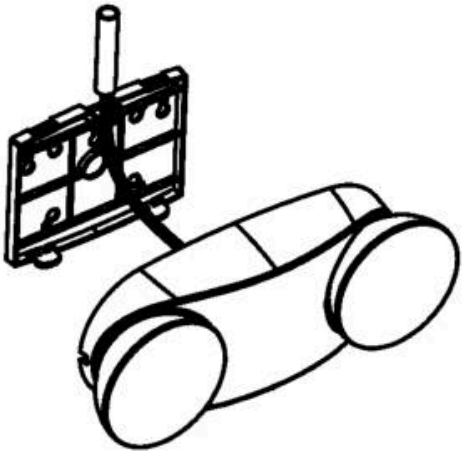

3. Reference step 4 - 7 in wall mounting above for ceiling mounting.

LED Emergency Light

WSD LED INC
Green Lighting Resources

TYPE: CR-7012 , CR-7108RG , CR-7085RG

CR-7108RG:

Choose mounting configuration (end, top or back mount). Plug remaining holes with the appropriate color plugs.



1. Secure canopy bracket to ceiling or wall.
2. Open the housing cover.
3. Secure housing and canopy with screws (see mounting configuration).
4. Feed the AC input leads (black, white and green) through the housing and canopy's center hole. Connect AC input leads to AC power supply leads.
5. Secure canopy into canopy bracket with 1-1/2" long #8-32 screws, then connect the battery.
6. Connect battery only after continuous AC power can be provided to the unit.
7. Snap housing cover into place.
8. Apply chevron directional indicators as required. Remove application templates when finished.

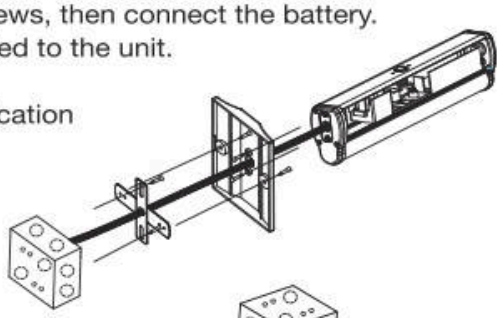

End Mount

1. Secure canopy to end plate of fixture with (2) 3/4" #10 -24 screws (included).
2. Run connection wires through large hole.
3. Make electrical connections and mount canopy to junction box using (2) 1-1/2" #8-32 screws (included).

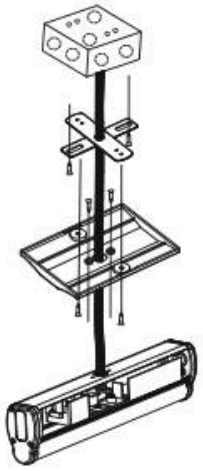

Top Mount

1. Secure canopy to top of fixture using 3/4" #8-32 screw and hex nut, and 1/2" center hole with threaded nipple and hex nuts (included).
2. Run connection wires through threaded nipple.
3. Make electrical connections and mount canopy to junction box using (2) 1-1/2" #8-32 screws (included).

Back Mount

1. Mount canopy to junction box using (2) 1-1/2" #8-32 screws.
2. Run connection wires through large hole in center of canopy.
3. Secure fixture to canopy with (2) 3/4" #10 -24 screws (included) by going directly into mounting holes.
4. Make electrical connections

END MOUNT



TOP MOUNT



Color Switch

1) When out of factory, it is red as default.
2) When you need to change the color, keep products connected to AC, keep pressing the test button, then the light would switch between red and green, release the button at the color you need.

BACK MOUNT

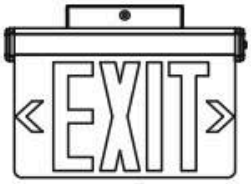

Single Sided and Double Sided

When out of factory, one of the side is covered.

1) You can use it as single sided directly, just peel off the arrows you don't need.
2) When you need double sided, peel off the films on the side then it would become double sided.
   Remember to peel off the arrows you don't need.

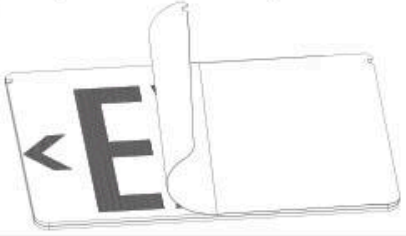

LED Emergency Light

WSD LED INC
Green Lighting Resources

TYPE: CR-7012 , CR-7108RG , CR-7085RG

CR-7085RG:

NOTE: First turn off electricity.

Wall mounting: Max.height: 7.5 ft（2.3m)

1.Remove mounting plate from fixture.

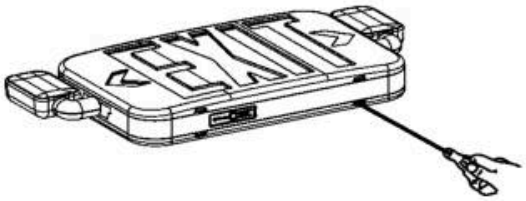

2.Knockout in back of mounting plate and push wires through the hole.

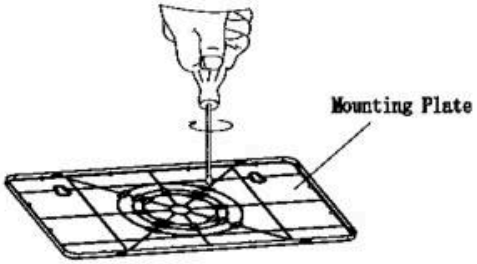

3.Securely attach mounting plate to J-box (not provided).

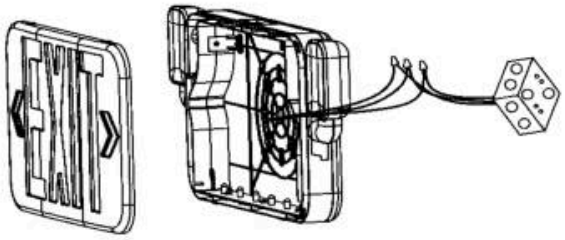

4.ELECTRICAL CONNECTIONS

Make the proper supply wire connections.

If using 120VAC, connect the black and White wires to the building utility.

If using 277VAC, connect the Orange and White wires to the building utility.

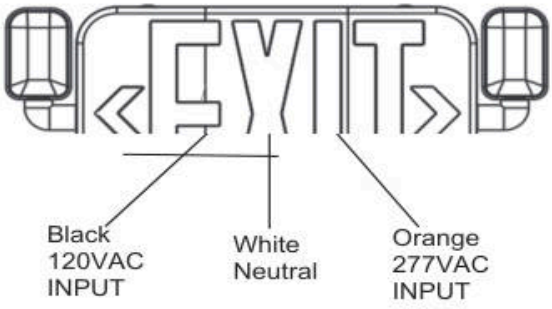

5. Connect the battery to connector on the PCBA.

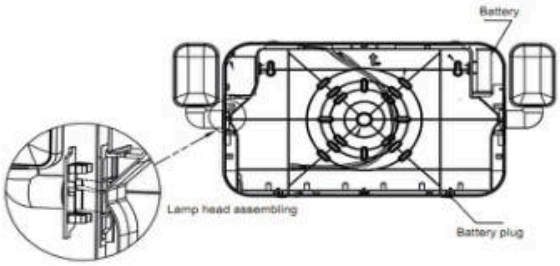

6. Snap fixture onto mounting plate and ensure no wires are pinched. Make sure unit is fully attached.

7. Restore power and press test button. Battery powered LED will come on, AC light will turn off.

Ceiling Mounting

1. Open top cover and knockout on the top of fixture.
2. Secure the mounting plate to tube with nut.
3. Push the wires through hole for ceiling mounting.

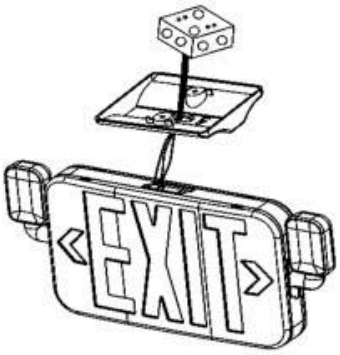

4. Reference step 4-7 in wall mounting above for ceiling mounting.

Notice: Red and Green Exit Lightswitchable
1. Initial packing is Red LED Exit
2. Switch to Green LED Exit if necessary

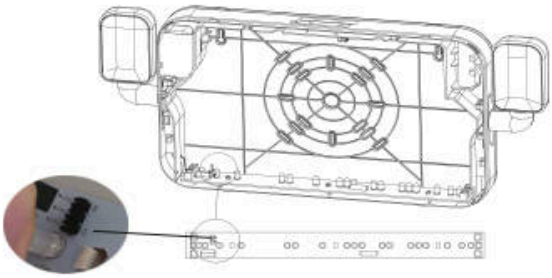



Place switch at R for red letter



Place switch at G for green letter