# Installation Manual
# All-in-One LED Solar Module Street Light

1. Instruction

This model includes solar panel, lithium battery, controller and LED light source.It is easily assembled according to the product label. This model is made of LED module, and replacement is simple.

2. Application

Mainly used for lighting in public places such as countryside roads, urban main roads or slow traffic roads, branch roads, tourism areas, parking lots, parks and public squares.

3. Installation Procedure

Method for Checking Whether the Lamp Functions Normally

① Handle the entire process with care, and ensure personal safety as well as product integrity.
② Unpack the lamp, take an opaque sheet to cover the solar panel to completely block light from passing through it.
③ Turn on the power switch and wait 10 seconds to enter discharge mode. In discharge mode, the LED indicator shall stay constantly on, and the LED light source shall also remain continuously lit.
④ After the LED light source lights up normally, remove the covering from the solar panel. Aim the solar panel toward sunlight or other strong light sources, then wait 10 seconds to enter charging mode. In charging mode, the indicator light shall flash slowly and the light source will turn off.
⑤ If all the above steps proceed normally, the product is in good condition and ready for installation.

4. Precautions

① To avoid damage, the product must be transported in its original packaging.
② Follow the instructions in the user manual when commissioning the controller.
③ Refer to the product specifications and nameplate label for the rated operating voltage of this model.
④ To prevent potential safety hazards, all maintenance and replacement work must be performed by qualified professional personnel.
⑤ The installation site shall be free of obstructions such as buildings, trees and power lines, so as to ensure the solar panel receives sufficient sunlight.
⑥ If the product is left unused for more than three months, charge it for two consecutive days under full sunlight before use to ensure optimal working performance.
⑦ In low rainfall areas, it is recommended to clean the solar panel once a month. In areas with heavy dust, appropriately increase the cleaning frequency according to the actual dust accumulation on the panel.

①

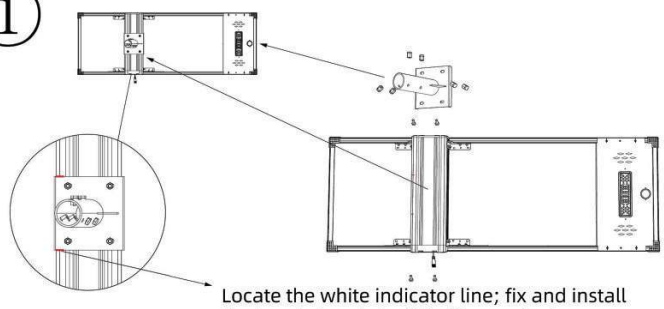

Locate the white indicator line; fix and install the bracket socket within the marked area.

Insert four M10*35 hex bolts into the two slots of the battery compartment. Align the bracket socket with the bolts and place it onto the compartment. Add flat washers and spring washers. Adjust the socket position within the scale marks on the battery compartment to ensure it is centered, then tighten the nuts.

②

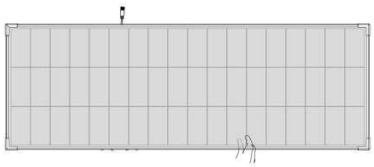

Cover the solar panel completely with paper or other materials.

③

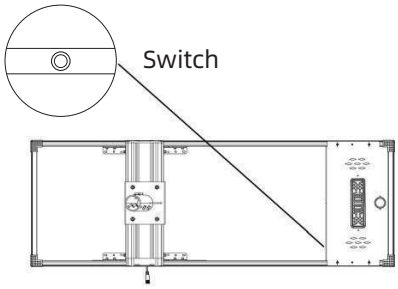


Cover the solar panel completely, then turn on the switch – the light will turn on. Next, expose the panel to direct sunlight (under clear weather with visible sun), and the light will turn off.
This indicates the system is functioning properly.

④

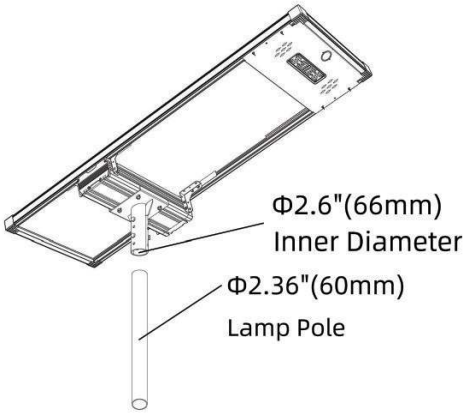


Insert the lamp assembly onto the lamp pole.

⑤



Use a wrench to tighten the six retaining screws to secure the lamp fixture.

⑥



Erect the lamp pole; the installation is complete.

## ⚠ WARNING

### If the lamp fails to work, please troubleshoot according to the following guide:

1.Check whether the switch is in the ON position (the switch is pressed down when switched on).

2.Open the cover plate and check the status of the controller indicator light, as shown in Figure A:

a. Constant on: The battery works normally.

b. Off: The battery is faulty.

c. Slow flashing: The system is in charging mode.

d. Fast flashing: System malfunction.

3.Check whether the solar panel is fully covered or shielded from sunlight.

4.If the product has been stored idle for more than three months, please recharge it before testing.

5.Ensure the ambient temperature for installation and use is within the range of 0-60℃.

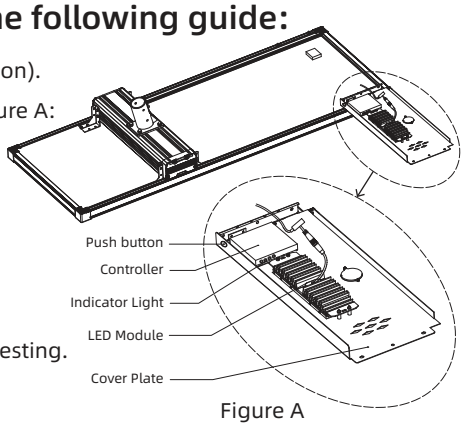


Figure A