Selectable Landscape Flood Light

Wattages: 8W,12W,16W,20W



WATT/CCT SELECTABLE

8 - 20W



The Selectable Landscape Flood Lighting Series can be widely used in indoor or outdoor lighting(Wet location) ,Excellent for Garden,Park,Shopping Malls, Office Buildings,The lawn, and many more applications.

50 000 h

Features:

- Optical design, greatly improved the light utilization and evenness
- High efficiency LED Driver, voltage AC120-277V
- Cast Aluminum design, better cooling, light quality, LED Tj <85°C
- 0-10V dimming standard
- CCT:3000-5000K
- 5 years manufacturer warranty
- Compatible with most Lutron and Leviton dimmers

Packaging information:

❖**LFL8121620W27-345K-D-K-P Inner Box:**160MMX140MMX160MM (6.30" X5.51" X6.30")

Outer Box:735MMX180MMX345MM(10Pcs/CTN) (28.94" X7.09" X13.58")

SPECIFICATION				
TYPE				
WATTAGE	8W	12W	16W	20W
LUMEN	1254 lm&4000K	1823 lm&4000K	2368 lm&4000K	2941 lm&4000K
CCT	3000K/4000K/5000K			
EFFICACY	> 140 lm/W			
CRI	> 70			
INPUT VOLTAGE	AC120-277V			
LIGHTING ANGLE	26°			
FACTORY SETTINGS	20W & 4000K			
LED TYPE	2835			
PF	> 0.98			
DRIVER EFFICIENCY	> 90%			
PROTECTION LEVEL	Wet location			
LIFE TIME	> 50000 hours			
OPERATING TEMPERATURE	-22°F ~ 113°F			
CABLE	3core,18AWG (11.8 inch)			
WARRANTY	5 year limited			

Selectable Landscape Flood Light

Wattages: 8W,12W,16W,20W

DIMENSION:

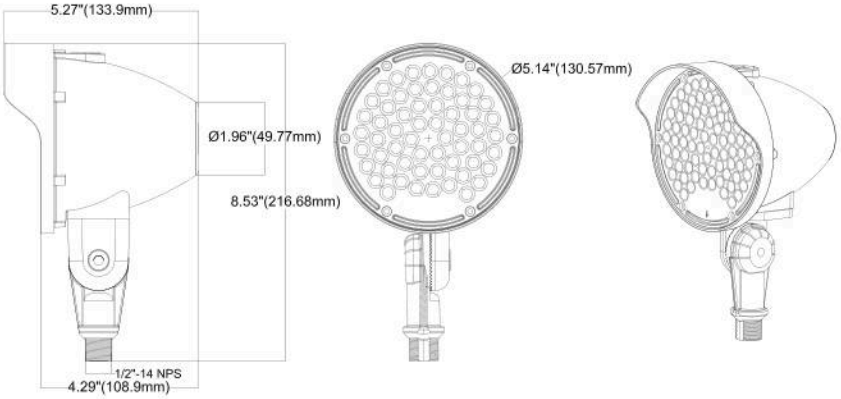

SPECIFICATIONS:

Shell materials: Aluminum & PC.

Finish: Dark Bronze(Standard)

Net weight : 2.95(lbs)

Product Size:φ130.57mmX216.68mm
φ5.14″X8.53″

CONTROL MODULE:



PHOTOCELL
STANDARD
P (Photocell)

Optical lens is made of high quality PC material to make the light even and soft.

PERFORMANCE:

SPECIFICATION												
TYPE												
POWER	8W			12W			16W			20W		
CCT	3000K	4000K	5000K	3000K	4000K	5000K	3000K	4000K	5000K	3000K	4000K	5000K
LUMENS (lm)	1185	1254	1250	1705	1823	1812	2183	2368	2323	2677	2941	2859
EFFICACY (lm/W)	> 148	> 160	> 157	> 145	> 158	> 153	> 138	> 155	> 148	> 132	> 151	> 142

Selectable Landscape Flood Light

Wattages: 8W,12W,16W,20W

ORDERING INFORMATION:

EXAMPLE:

LFL8121620W27-345K-Z[D,W,B,S]-U[K,T]-Y[Blank,P]

LFL	8121620W	27	345K	Z	U	Y
PRODUCT	POWER	VOLTAGE	CCT	FINISH	MOUNLIGHT	CONTROL
LFL Landscape Flood Light	**8121620W** (8W/12W/ 16W/20W)	**27** AC120-277V	**345K** **3K** (3000K) **4K** (4000K) **5K** (5000K)	**D** (Dark Bronze) **W** (White) **B** (Black) **S** (Silvery)	**T** (Trunnion) **K** (Knuckle)	**P** Photocell

MOUNTING OPTIONS:(OPTIONAL)



Trunnion

Wall Mount Wall Mount is easy to install for direct wall mounting with 1/2" conduit wiring mounting.

Selectable Landscape Flood Light

Wattages: 8W,12W,16W,20W

PHOTOMETRICS:

For complete IES files, please visit our website.

LFL8121620W27-345K-D-K-P (20W,3000K)

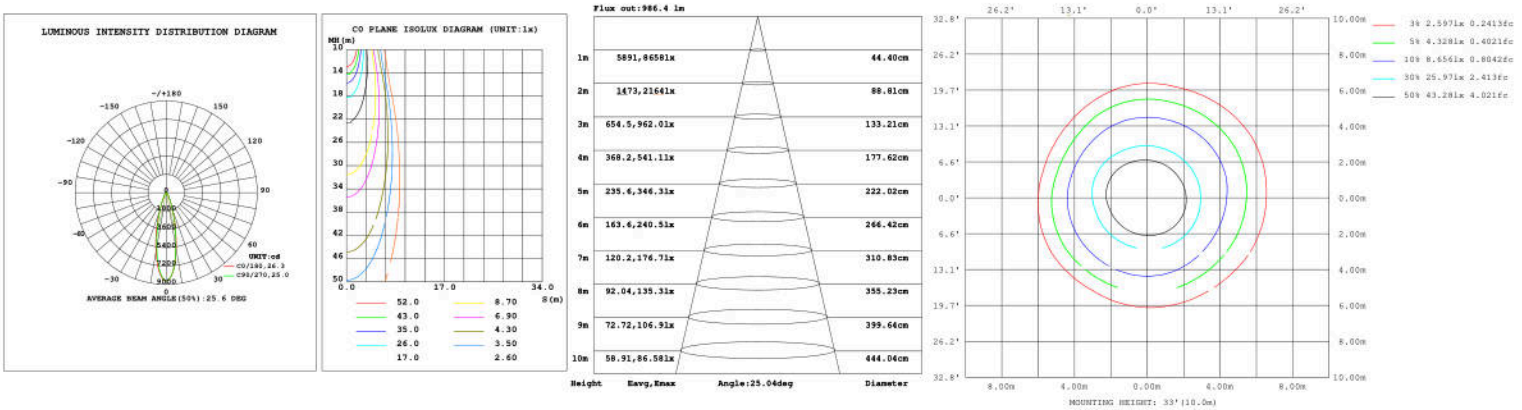

LFL8121620W27-345K-D-S-P (20W,4000K)

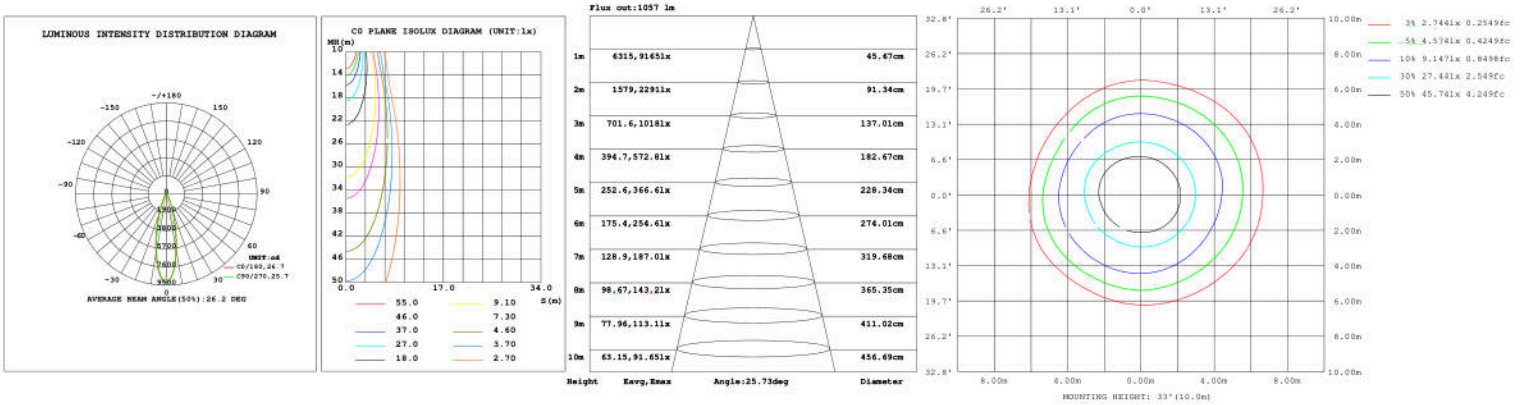

LFL8121620W27-345K-D-S-P (20W,5000K)

