4/6 INCH 5CCT Selectable LED Square Slim Panel Light

Installation Instructions

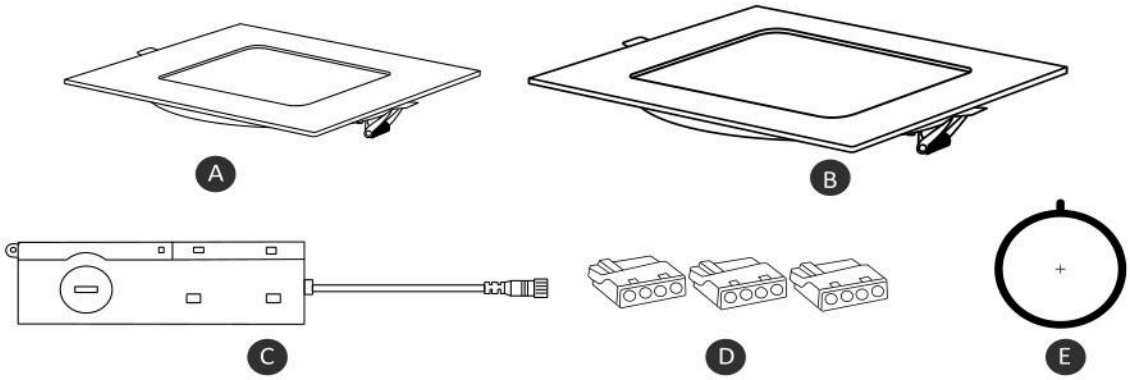

PACKAGE CONTENTS

PART	DESCRIPTION	QUANTITY	PART	DESCRIPTION	QUANTITY
A	4 INCH 5CCT Selectable LED Square Slim Panel Light	1	B	6 INCH 5CCT Selectable LED Square Slim Panel Light	1
C	J-Box driver	1	C	J-Box driver	1
D	Connector	3	D	Connector	3
E	Hole cutout card	1	E	Hole cutout card	1

DIMMER RECOMMENDATION

This unit may operate on other dimmers we haven't tested with. (Input 120V 60Hz)

LEVITON	6672, RNL06, IPL06,DSL06, 6674
LUTRON	TG-600PR-WH, S-600PR-WH,CTCL-153PDH-WH, TGCL-153PH-LA, SLV-600P-AL, DV-600PR-WH, SCL-153PH-WH, GT-600P, DVCL-153P,MSCL-OP153M, PD-6WCL , MACL-153M//MA-R

IMPORTANT

READ ALL INSTRUCTIONS BEFORE INSTALLING FIXTURES. RETAIN FOR FUTURE REFERENCE.

SAFETY

For your safety, this fixture must be wired in accordance to local electrical codes and ordinances. All work should be done by a qualified electrician.

ASSEMBLY INSTRUCTIONS

1. Preparing for installation: disconnect electrical power before installing or servicing any part of this fixture.

2. Locate a suitable position to plate the fixture and open in accordance to the cut-hole dimensions (refer to hole cut table for appropriate size).

3. Run electrical wire from the switch (power supply) through the mounting hole-use nmd90 romex or bx cable.

⚠ WARNING

- Make certain power is off from the electrical panel before starting installation or attempting any maintenance. Indoor installation only.
- Risk of fire or electrical shock. Do not alter, relocate or remove wiring, junction box, power supply or any other electrical components.

- Suitable for Wet Locations.
- To prevent electrical shock, please wear rubber shoes and work gloves when installing the fixture.

INSTALLATION STEPS:

1. Turn off the power before installation. Remove the existing fixture if applicable. Determine the location and necessary hole cutout diameter using the supplied table and cut the ceiling hole with the listed approximate diameter, see Fig1.

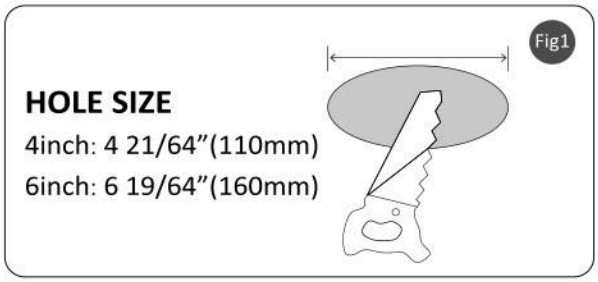

2. Open the J- Box cover and remove the appropriate knockout(s) on the side panel. Install the appropriate cable clamp(s)(not included) and insert the electrical supply cable through the cable clamp. Connect the supply wires to the fixture wires by using 3 connectors. Attach white to white, black to black, copper to the ground wire, see Fig2.

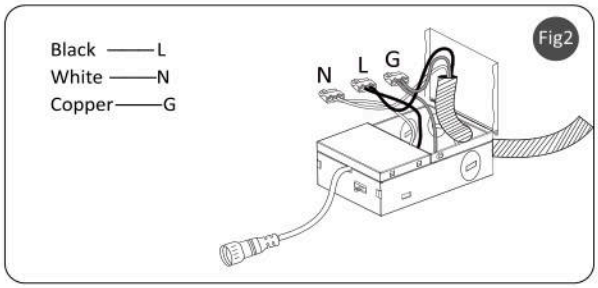

3. Insert J-Box through the mounting hole and secure it, connect the fixture power cable to the J-Box. Select lamp color desired with the CCT switch, see Fig3.

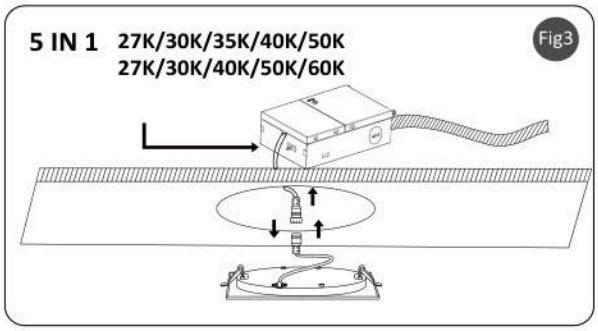

4. Push the spring-loaded clips into the mounting hole upwards and insert the fixture into it. Release the clips and the fixture will be pulled flush to the ceiling, see Fig4.

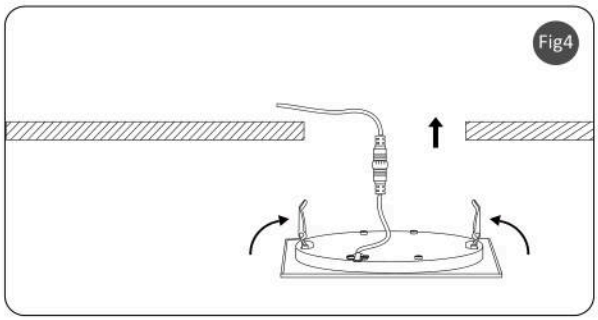

5. Turn on the power after installation, check the fixture can work well, see Fig5.

