LBS Lighting

Solar LED Post Top Light



Wattages: 12W

The working principle of Solar LED Post Top Light: The solar panel is irradiated by sunlight, absorbs the sun light and converts it into electric energy to charge the battery. At night, the battery pack provides power to supply the LED lighting to realize the illumination.

The DC controller can ensure that the battery pack is not damaged due to overcharging or overdischarging,meanwhile, it has temperature compensation and lightning protection, reverse polarity protection and other functions such as Light control, lighting 3-5 rainy days.

Ideal for park,villa residence,Lawns,Courtyards, Roadways and many other applications.



FEATURES

- High luminous efficiency and long working life.
- A special solar controller is used.
- Osram light source chip is used.
- Monocrystalline silicon solar panel.
- Excellent optics design, greatly improve the light utilization and evenness.



SPECIFICATION	
TYPE	SPWPT12W5-50K-B
WATTAGE	12W
CCT	5000K
LUMEN	1245.6 LM
CRI	80
MATERIAL	Die-casting aluminum
SOLAR PANELS	5V/20W
BATTERY	3.2V/20000mAh
CHIP	OSRAM 3030
LAMP SIZE	15.75 X 15.75 X 16.54 inch
WORKING TIME	8H
CHARGING TIME	3-5H
WORKING TEMPERATURE	-4°F ~ 122°F
CABLE	NO
OUTDOOR RATING	IP65
WARRANTY	2 year limited

Solar LED Post Top Light

Wattages: 12W

DIMENSION

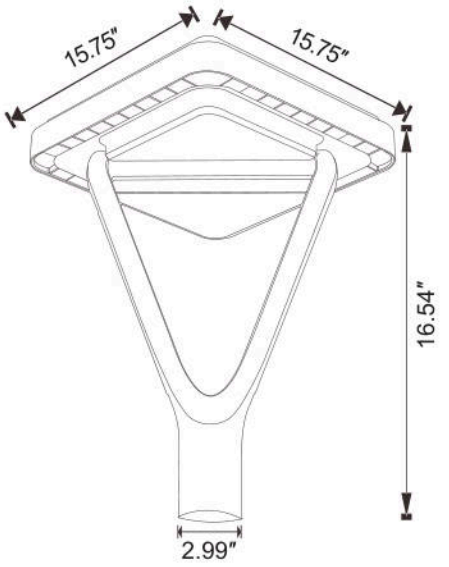

Inner Diameter

PACKAGING INFORMATION

❖**SPWPT12W5-50K-B**

OUTER BOX:

405MMX405MMX200MM(1Pcs/CTN)

(15.94" X 15.94" X 7.87")

SPECIFICATIONS:

Shell materials: Aluminum & PC

Net weight : 10.69 lbs

Finish: Black(Standard)

Product Size:400 X400X 420(mm)

15.75"X15.75"X16.54"

ACCESSORIES (standard)



Screw+Hex wrench

ORDERING INFORMATION

EXAMPLE:

SPWPT12W5-50K-Z[D, W, B, S]

LBS	SPWPT	12W	5	50K	Z
COMPANY	PRODUCT	WATTAGE	VOLTAGE	CCT	FINISH
	SPWPT (Solar LED Post Top Light)	**12W** - (12W)	**5** - (5V)	**50K** - (5000K)	**D** - (Dark Bronze) **W** - (White) **B** - (Black) **S** - (Silver)