Emergency LED Mini Wall Pack Light

TYPE: 907.0259

Emergency LED Mini Wall Pack Light accord with US STANDARD - Pressure casting-molded, flame-retardant and high impact thermoplastic housing.This exit sign with design is great for placing on doorways, isles, restaurant, office building and warehouses.



907.0259

PRODUCT DISPLAY:

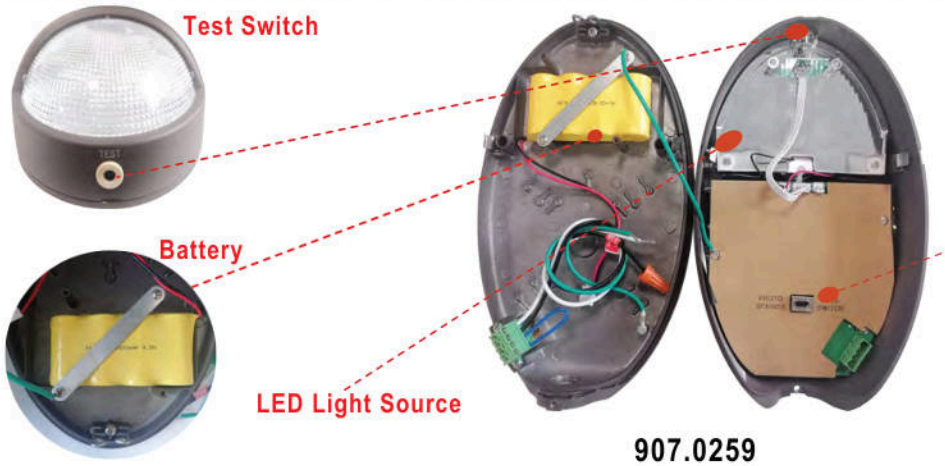

907.0259

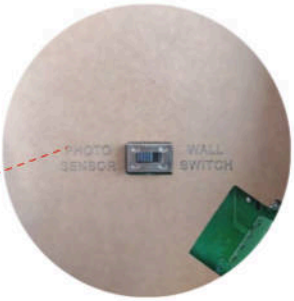

PHOTO SENSOR FUNCTION SWITCH

When you need to activate the light sensor function, you only need to shift the dial to the left gear. If you need to turn off the light sensor function, switch the dial to the right gear.

SPECIFICATION	
TYPE	907.0259
WORKING VOLTAGE	120-277V 60Hz
POWER CONSUMPTION	4.8W max
OUTPUT	Super Bright COB LED 12W
BATTERY	4.8V 1800mAh Nickel Cadmium Battery
LUMEN	1000 LM
EMERGENCY LUMEN	400 LM
CONVERSION TIME	< 0.2 Second
EMERGENCY DURATION	90 Mins
RECHARGE TIME	24 Hours
PROTECTION LEVEL	IP65 Protection
OPERATION TEMPERATURE	0°C ~ 40°C
CERTIFICATION	UL
FINISH	Dark Bronze
CABLE	Input Connect, No cable
WARRANTY	2 year limited

Emergency LED Mini Wall Pack Light

TYPE: 907.0259

DIMENSION:

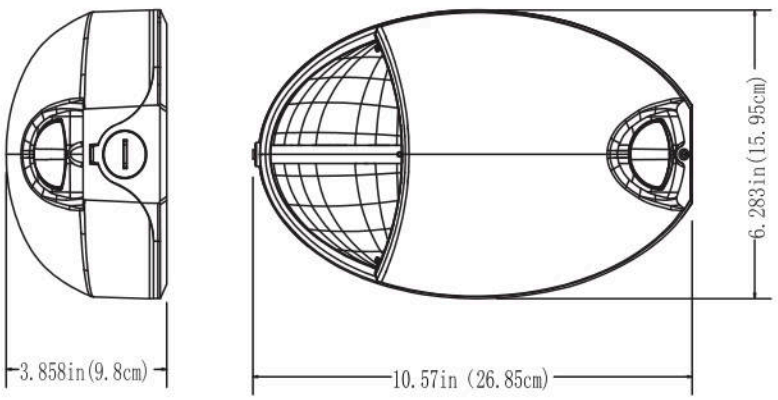

WATTAGE	CR-7054
NT. WEIGHT	2.87 lbs
FINISH	Dark Bronze
BOX DIM.	10.98" X 6.50" X 4.25"(1Pcs/CTN)
OUTER BOX	13.58" x 13.46" x 11.61"(6Pcs/CTN)

ORDERING INFORMATION

EXAMPLE:

907.0259

LBS	907.0259
Mftr	CODE
LBS-	**907.0259** Product Code

MOUNTING ACCESSORIES: (Standard)



Emergency LED Mini Wall Pack Light

TYPE: 907.0259

WIRING DIAGRAM:

Fig. 1

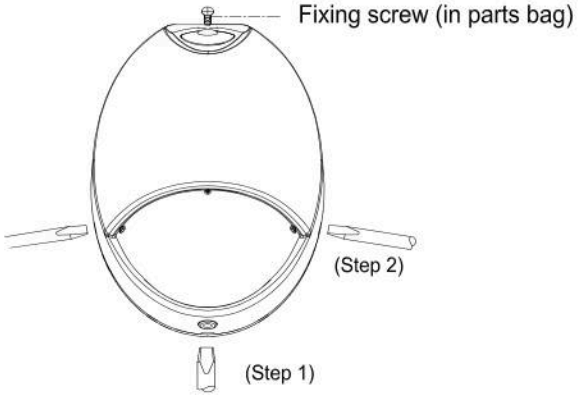

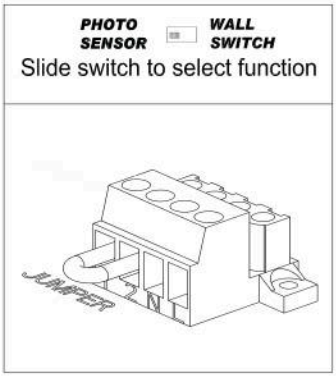

Fig. 2 Wall Mount - Back Power Feed

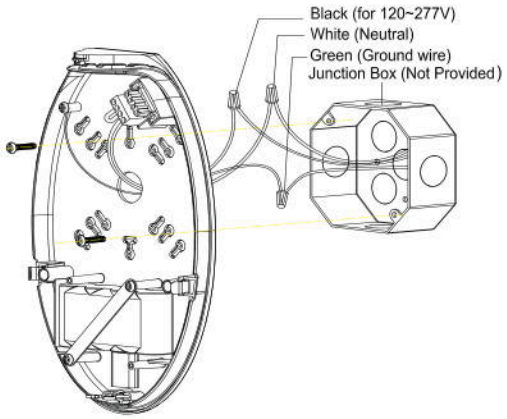

Fig. 3 Wall Mount -Surface Wiring (Top Power Feed Only)

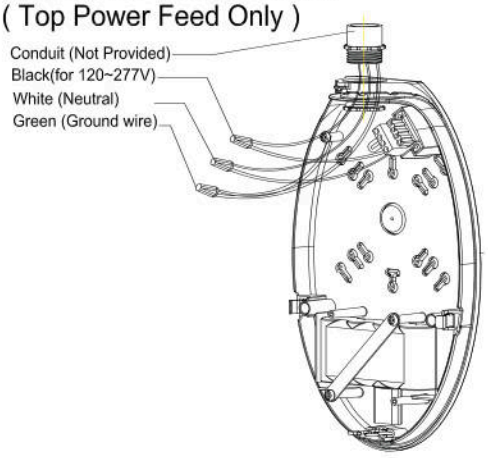

Fig. 4

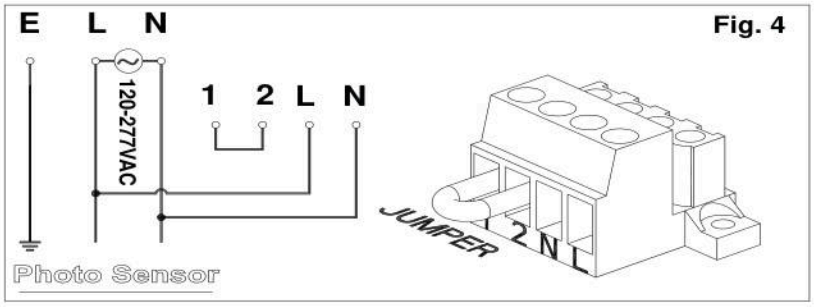

Fig. 5

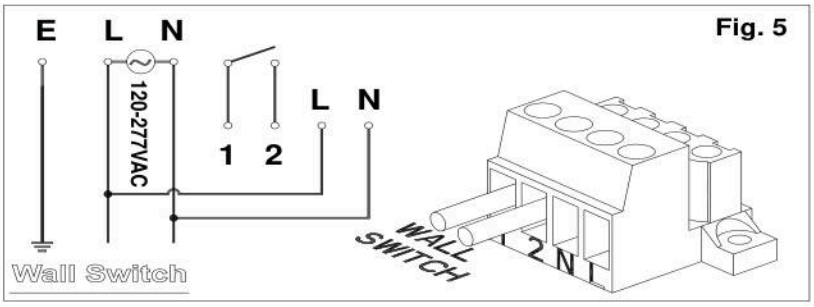

Fig. 6

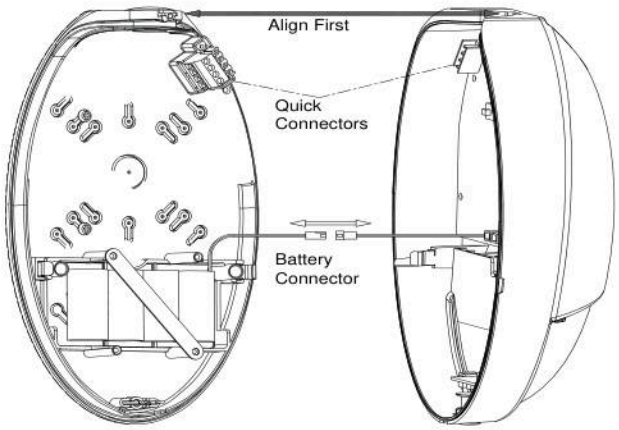

Emergency LED Mini Wall Pack Light

TYPE: 907.0259

INSTRUCTIONS :

NOTE: First turn off electricity.

Max Mounting Height: 11.1ft(3.3M)

1.Remove cover from fixture with a screwdriver.



2.Select working mode.

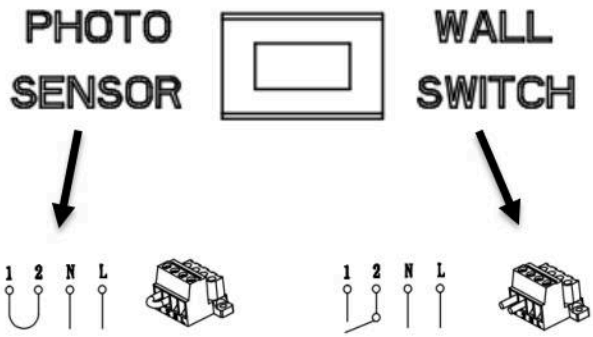

3.ELECTRICAL CONNECTIONS

Make the proper supply wire connections.
Connect L and N to building power supply.

4. Pull out all AC wires from the back of the fixture or top of the fixture for mounting. (J-box not provided)

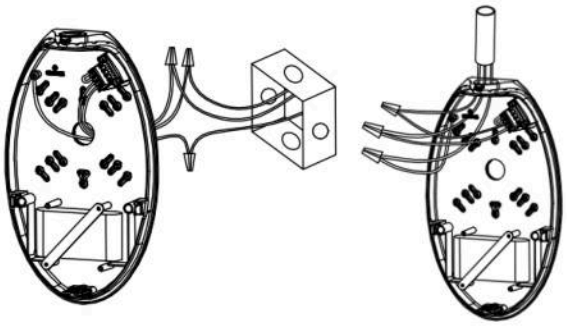

5. Restore power and press test button. AC light will turn off.

Function:

1. When AC connected, the green indicator on.
2. For normal lighting use, the fixture can be configured for automatic operation by the built-in daylight photo sensor, or can be switched through an external switch. For battery backup models the fixture will illuminate from battery power on loss of normal AC, regardless of the photo sensor or wall switch operation.
3. For photo sensor operation, connect the jumper between terminals 1 and 2 (Pic2) and slide the slide switch (Pic4) to the Photo Sensor position. The photo sensor will turn the fixture on when the ambient lighting <10 Lux, and off when the ambient lighting >30 Lux.
4. For an external switch: remove the jumper between terminals 1 and 2(Pic3), and slide the slide switch (Pic4) to the Wall Switch position. The external switch connections must be fully isolated from any other circuitry.

Photo Sensor Operation

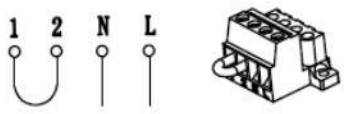

Pic2

External Switch Operation

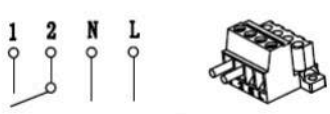

Pic 3

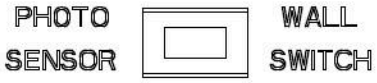

Pic4