Selectable Die-cast Aluminum Linear High Bay Lights

WSD LED INC
Green Lighting Resources

Wattage: 80W,120W, 160W, 200W; 120W, 180W 240W, 300W; 160W, 240W 320W, 400W



The Selectable Die-cast Aluminum Linear High Bay Lights with its all-in-one, lightweight and slim with multiple mounting situations available put it at the top of the list for any high ceiling area where super bright light is needed. The LED Linear High bay Light Series can be widely used for indoor excellent for warehouse, industry building, factories, fitness center, and many other applications.

Lighting controls meet design lights consortium (DLC) networked lighting control system technical requirements, LLLC, Energy Monitoring and High End Trim function.

MESH RANGE	60ft node-to-node and 500ft node-to-Gateway (Commissioning)

2025-03-12 VER 2.0

FEATURES

- Optical design, greatly improved the light utilization an evenness.
- High efficiency LED Driver, voltage AC120-277.
- Rugged galvanized rolled iron plate housing, better cooling, light quality, LED Tj < 85°C.
- 0-10V dim to 10%.
- 12Vdc auxiliary dimming
- Field install plug and play Bi-Level Sensor.



Bluetooth® (Option)

Easy field-install motion sensor

SPECIFICATION			
TYPE	WSD-LHB8121620W27-345K	WSD-LHB12182430W27-345K	WSD-LHB16243240W27-345K
WATTAGE	80W/120W/160W/200W	120W/180W/240W/300W	160W/240W/320W/400W
LUMEN	13265 lm/18648 lm/23282 lm/29388 lm	20558 lm/29789 lm/38191 lm/45305 lm	26810 lm/37594 lm/46691 lm/58306 lm
EFFICACY			
CCT	3000K/4000K/5000K		
CRI	80		
INPUT VOLTAGE	AC120-277V		
LIGHT ANGLE	90°		
POWER FACTOR	0.98		
DRIVER EFFICACY	90%		
FACTORY SETTINGS	200W & 4000K	300W & 4000K	400W & 4000K
LIFE SPAN	over 75,000 hrs		
WORKING TEMPERATURE	-40°F ~ 122°F		
STORAGE TEMPERATURE	-40°F ~ 176°F		
PROTECTION LEVEL	Damp location		
CABLE	Input connect, No cable		
WARRANTY	5 year limited		

Selectable Die-cast Aluminum Linear High Bay Lights

WSD LED INC
Green Lighting Resources

Wattage: 80W,120W, 160W, 200W; 120W, 180W 240W, 300W; 160W, 240W 320W, 400W

DIMENSION

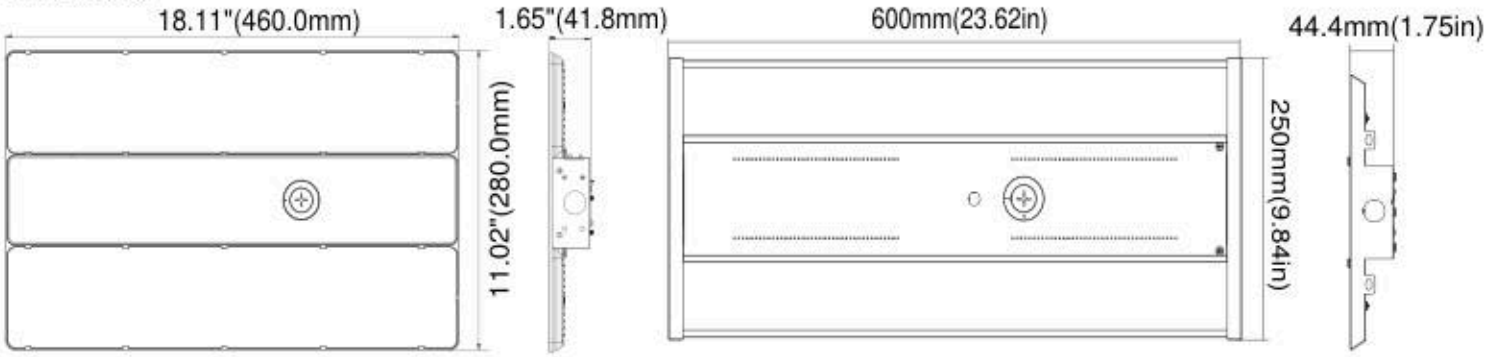

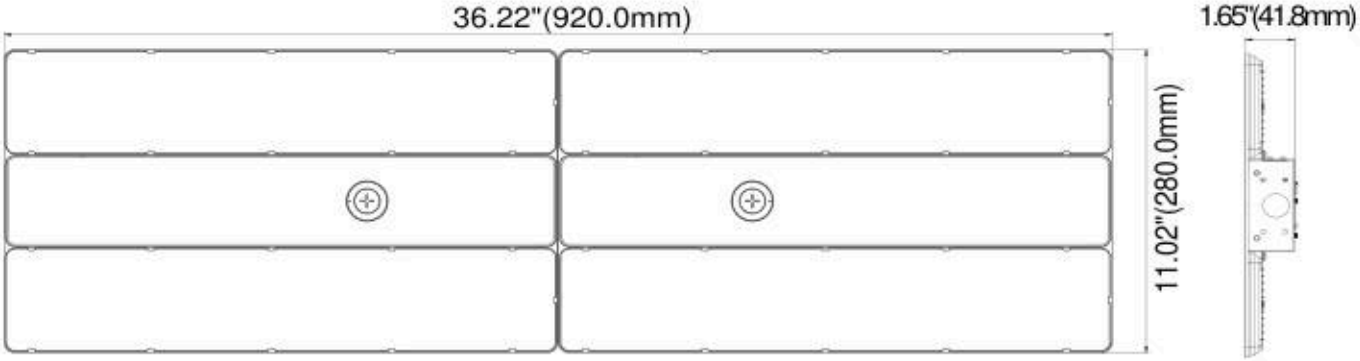

WATTAGE	80W, 120W, 160W, 200W
NET. WEIGHT	4.41 lbs (1Pcs)
BOX DIM.	19.7" x 19.3" x 7.1"(6Pcs/CTN)

WATTAGE	120W, 180W, 240W, 300W
NET. WEIGHT	6.89 lbs (1Pcs)
BOX DIM.	28.4" x 20.1" x 5.5"(4Pcs/CTN)

WATTAGE	160W, 240W, 320W, 400W
NET. WEIGHT	9.37 lbs (1Pcs)
BOX DIM.	37.4" x 12.2" x 4.1"(2Pcs/CTN)

2025-03-12 VER 2.0

EMERGENCY BACK-UP (SOLD SEPARATELY)



WSD-EML15W27-XX/WSD-EML20W27-XX
15W/20W Emergency Backup
Battery LED Driver
Available only for ≤200W low-voltage (120-277Vac) Luminaire models



WSD-EML40W27-XX
40W Emergency Backup
Battery LED Driver
Available only for ≤400W low-voltage (120-277Vac) Luminaire models

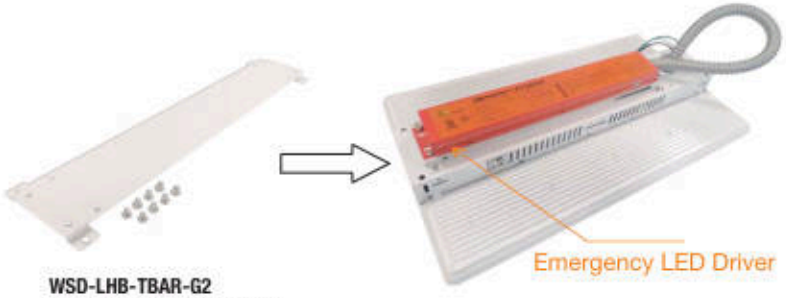

WSD-LHB-TBAR-G2
Emergency Backup Battery
LED Driver Mounting Kit

Selectable Die-cast Aluminum Linear High Bay Lights

WSD LED INC
Green Lighting Resources

Wattage: 80W,120W, 160W, 200W; 120W, 180W 240W, 300W; 160W, 240W 320W, 400W

CONTROL (SOLD SEPARATELY)



Bluetooth
NLC-BT-MW-SR-001
Bluetooth Microwave Motion Sensor
(Silvair Bluetooth)



NLC-MW-PT-002
Bi -level microwave Sensor



Bluetooth
NLC-BT-MW-GE-001
Bluetooth Microwave Fixture Sensor
(GEBC Bluetooth)



NLC-PIR-PT-001
PIR Motion Sensor



RC100
Remote Controller
(With NLC-MW-PT-002 and NLC-PIR-PT-001 use)



BRI-WS204-GE
4-Button Wireless Wall Switch
(Can only be used for NLC-BT-MW-GE-001)

2025-03-12 VER 2.0

ORDERING INFORMATION

EXAMPLE:

WSD-LHB8121620W27-345K-E[Blank,M] / WSD-LHB12182430W27-345K-E[Blank,M] / WSD-LHB16243240W27-345K-E[Blank,M]

WSD	LHB	8121620W	27	345K	E
PRODUCT	PRODUCT	WATTAGE	VOLTAGE	CCT	CONTROL
WSD (WSD LED INC)	**LHB** (Linear Hig Bay)	**8121620W** (80W/120W/160W/200W) **12182430W** (120W/180W/240W/300W) **16243240W** (160W/240W/320W/400W)	**27** (AC120-277V)	**345K -** (3000K/4000K/5000K)	**M** Motion Sensor

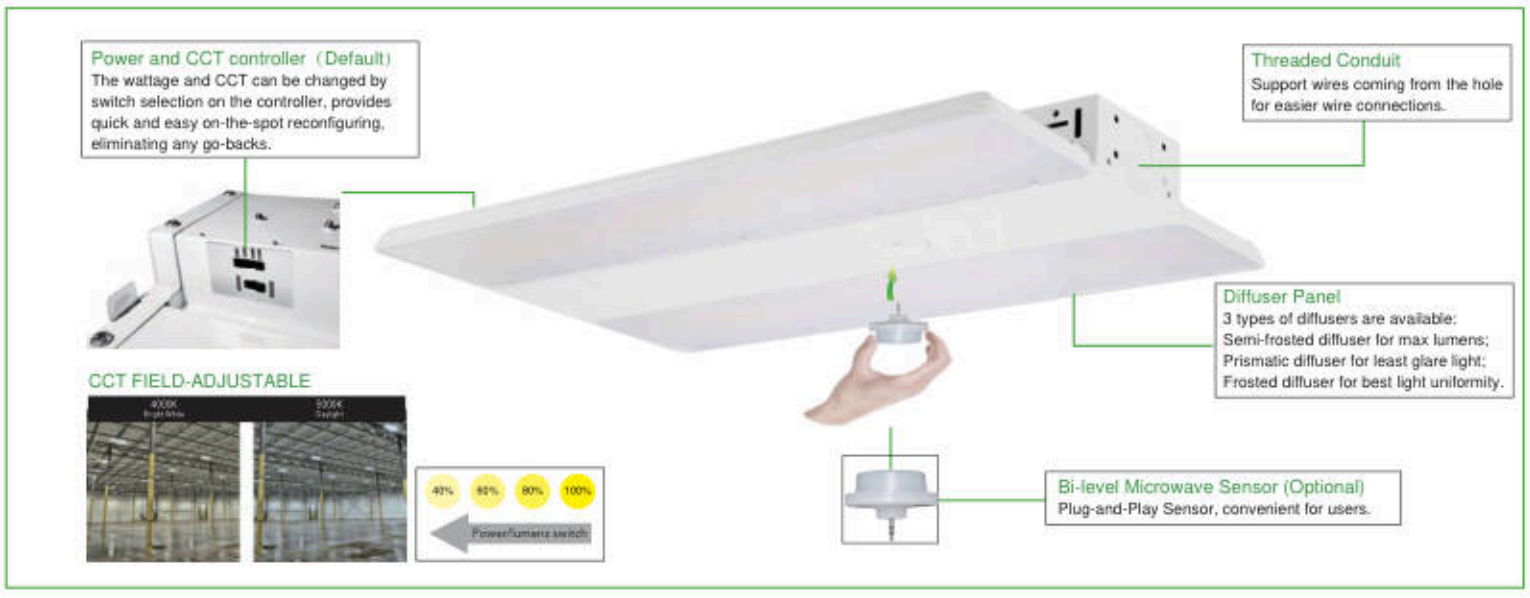

Selectable Die-cast Aluminum Linear High Bay Lights

WSD LED INC
Green Lighting Resources

Wattage: 80W,120W, 160W, 200W; 120W, 180W 240W, 300W; 160W, 240W 320W, 400W

INCLUDED IN THE PACKAGE (STANDARD)



WSD-LHB-SWR
59.01 inch Steel Wire Rope

PENDANT MOUNTING BOX (SOLD SEPARATELY)



WSD-LHB-CPM
Conduit Pendant Mount
Applicable Luminaire Models:
WSD-LHB8121620W27-345K
WSD-LHB12182430W27-345K



WSD-LHB-400W-CPM
Conduit Pendant Mount
Applicable Luminaire Models:
WSD-LHB16243240W27-345K



WSD-LHB-SM
Surface Mounting
Applicable Luminaire Models:
WSD-LHB8121620W27-345K
WSD-LHB12182430W27-345K
WSD-LHB16243240W27-345K

WIRE GUARD (SOLD SEPARATELY)



WSD-LHB-200W-WG-W
Wire guard for 80W/120W/160W/200W
Applicable Luminaire Models:
WSD-LHB8121620W27-345K

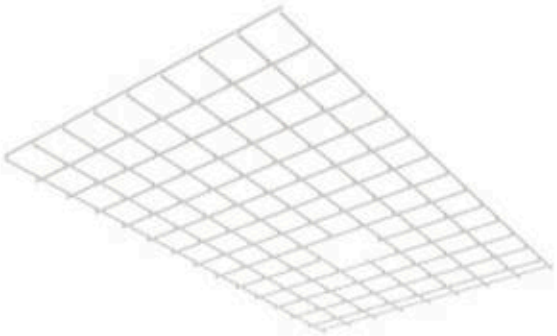

WSD-LHB-300W-WG-W
Wire guard for 120W/180W/240W/300W
Applicable Luminaire Models:
WSD-LHB12182430W27-345K

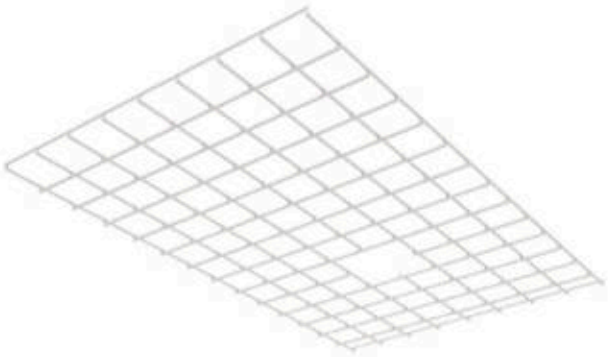

WSD-LHB-400W-WG-W
Wire guard for 160W/240W/320W/400W
Applicable Luminaire Models:
WSD-LHB16243240W27-345K

Selectable Die-cast Aluminum Linear High Bay Lights

WSD LED INC
Green Lighting Resources

Wattage: 80W,120W, 160W, 200W; 120W, 180W 240W, 300W; 160W, 240W 320W, 400W



NLC-BT-MW-SR-001
Plug and Play Network BLE Nodes and Sensor

The Bluetooth Lighting Control provides automated individual and group control of light fixtures using on sensors and Bluetooth sigmesh technology. The NLC-BT-MW-SR-001 mounted in an Commercial lighting fixture and provides multi-level control solution based on motion and or daylight harvesting contribution.

2025-03-12 VER 2.0

FEATURES

- Lighting controls meet design lights consortium (DLC) networked lighting control system technical requirements.
- Quick connect and adjust different sensor angle.
- Easy commissioning with Mobile App (Available in IOS).
- Bluetooth network with Saas working by computer
- Individual addressability and/or grouping.
- Time clock scheduling for individual lights, groups or scenes.
- Multi-level dimming: manual ON/OFF automatic ON/OFF, and automatic partial ON/OFF, daylight harvesting control capability.

DIMENSION

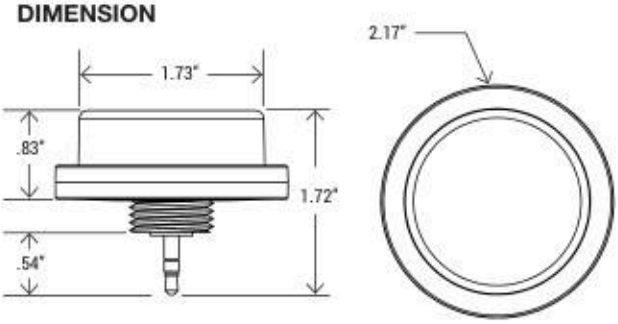

COVERAGE

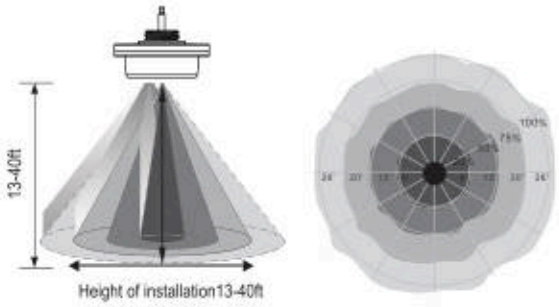

MICROWAVE SENSOR FEATURES	
DAYLIGHT HARVESTING	On/Off
MOTION SENSING	On/Off
FIRST TIME DELAY	1-59 mins/infinite
SECOND TIME DELAY	0-59 mins/infinite
DIM LEVEL	0-100%
MOUNTING HEIGHT	13-40ft
DETECTION RANGE	up to 52ft diameter
DETECTION: HORIZONTAL	360°
DETECTION: VERTICAL	90°

SPECIFICATION	
NETWORK BLE MESH	Yes
DAYLIGHT HARVESTING	Yes
MICROWAVE MOTION SENSOR	Yes
DETECTION MODE	Occupancy/Vancancy/Bi-level in 1 Unit
OPERATING VOLTAGE	12-24V DC
OPERATING CURRENT	>50mA
SINKING CURRENT	max. 25mA
CONTROL OUTPUT	0-10V
RADIO FREQUENCY	2.4GHz ± 75MHz
WIRELESS STANDARD	BLE 5.0 MESH
PRORGRAMMING	Silvair iOS App (IOS)
CYBERSECURITY	UL
ENCRYPTION	AES 128-bit
MESH RANGE	60ft node-to-node and 500ft node-to-device (Commissioning)
SAFETY	cULus Listed
FCC	FCC
OPERATING TEMP.	-20°C - +60°C
IP RATING	IP65
WARRANTY	5 year limited

COMMISSIONING

Silvair iOS App makes it easy to pair devices, create groups, set scenes/schedules, customize dimming levels, and adjust high trim based on application needs.

Silvair App

Please scan and download the app.

iOS

Operation Instruction:
https://youtu.be/8KWPK7z_Tng

Selectable Die-cast Aluminum Linear High Bay Lights

WSD LED INC
Green Lighting Resources

Wattage: 80W,120W, 160W, 200W; 120W, 180W 240W, 300W; 160W, 240W 320W, 400W

GATEWAY REMOTE CONTROL

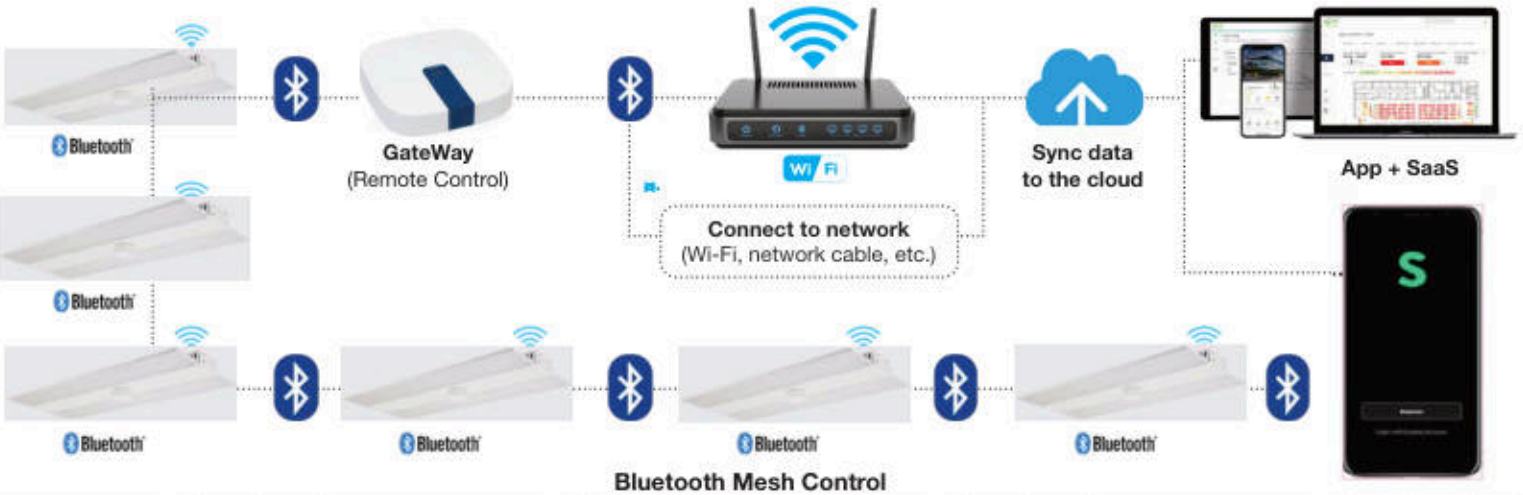



INDUSTRIAL GATEWAY

SGW-101
Smart Engineering Gateway

The Silvair Gateway connects Bluetooth mesh networks that have been commissioned using the Silvair Commissioning tools to the Silvair cloud. This allows the scheduling of events and delivery of services based on the data generated by these networks.

Functions:

The Silvair Gateway enables the following functions in the Silvair web app: • Scheduling (available by default)
- ○Scheduling changes in scenes and lighting control scenarios (for example occupancy sensing,daylight harvesting) for specific times or days.

• Energyand occupancy monitoring (additional paid service)
- ○Visualizing energy use and occupancy via the Silvair web app.
- ○Downloading energy and occupancy via the Silvair web app and cloud-based API.

• Remote monitoring and control (additional paid service)
- ○ Low-latency monitoring of the status of devices in the network via API.
- ○ Low-latency control of devices in the network via API. • System diagnostics
- ○ Monitoring of the status of Bluetooth mesh networks.
- ○ Remote troubleshooting of networking issues.

Features:

- •Future-proof Linux operating system.
- •Simple commissioning using the Silvair Commissioning tools.
- •Automatic connection to the Silvair cloud.
- •Secure provisioning with secure IDs and encrypted keys.
- •High level of hardware and software security (secure boot and encrypted file system can only be accessed with the management platform).
- •Automatic security updates.
- •Prompt releases of OS updates and fixes to vulnerabilities.
- •Low-latency transfer of network, luminaire, and sensor status data to the Silvair cloud.
- •Schedule caching.
- •Automatic remote firmware updates.
- •Display of gateway and network performance metrics (requires the Silvair web app).

SPECIFICATION

POWER SUPPLY	4.5–5.5 V DC, 2 A Power over Ethernet 36–57 V DC (IEEE 802.3af)
OPERATING SYSTEM	Ubuntu Core
PROCESSOR	i.MX6ULL (Y2), 32-bit ARM 800 MHz
MEMORY	512 MB DDR3L SDRAM 8GB eMMC
COMMUNICATION PROTOCOLS	Bluetooth mesh (2.4 GHz Bluetooth Low Energy) Wi-Fi 802.11a/b/g/n/ac (2.4/5 GHz) 4G LTE Cat 1 with 2G/3G (only for Cascade-500-W and Cascade-500-X gateways)
PORTS	1 x RJ45 10/100 Ethernet 1 x USB 2.0 Type-A 2 x external dipole antenna, 5 dBi (only for Cascade-500-W and Cascade-500-X gateways)
REQUIRED AMBIENT TEMPERATURE	0°C to 60°C 32°F to 140°F
ENCLOSURE DIMENSIONS	127 mm x 127 mm x 30 mm (5 inch x 5 inch x 1.2 inch)
MOUNTING POSITION	Wall or surface mounted. As close to the geometrical center of the lighting network as possible, but as far as possible from potential sources of interference.
SECURITY	Secure boot with encrypted operating system Secure communication with the Silvair Cloud over Internet (TLS) Secure communication with devices over qualified Bluetooth mesh

Selectable Die-cast Aluminum Linear High Bay Lights

WSD LED INC
Green Lighting Resources

Wattage: 80W,120W, 160W, 200W; 120W, 180W 240W, 300W; 160W, 240W 320W, 400W

PHOTOMETRICS

For complete IES files, please visit our website.

2025-03-12 VER 2.0

WSD-LHB8121620W27-345K (200W&4000K)

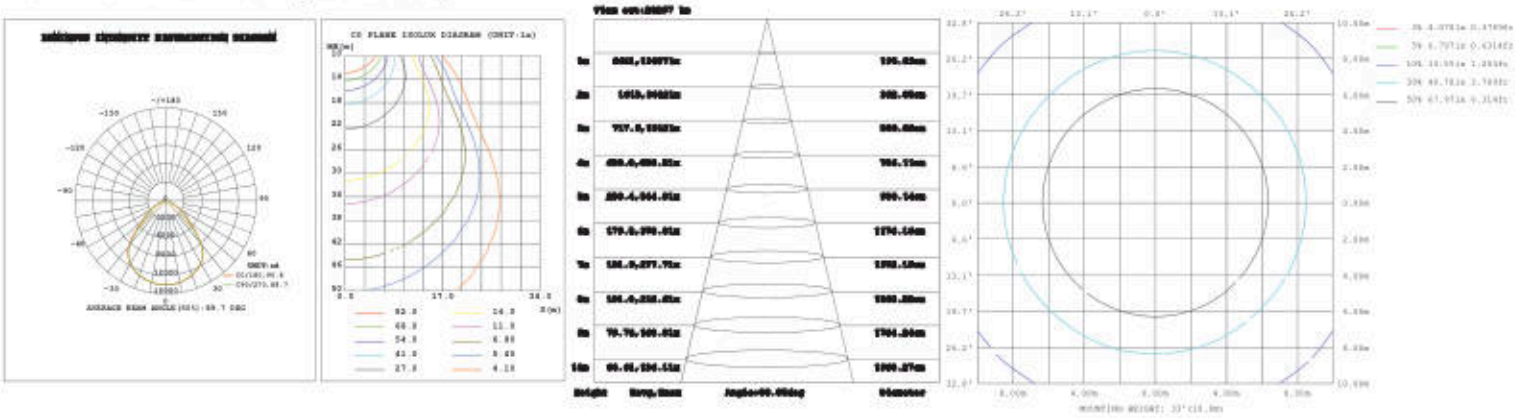

WSD-LHB12182430W27-345K (300W&4000K)

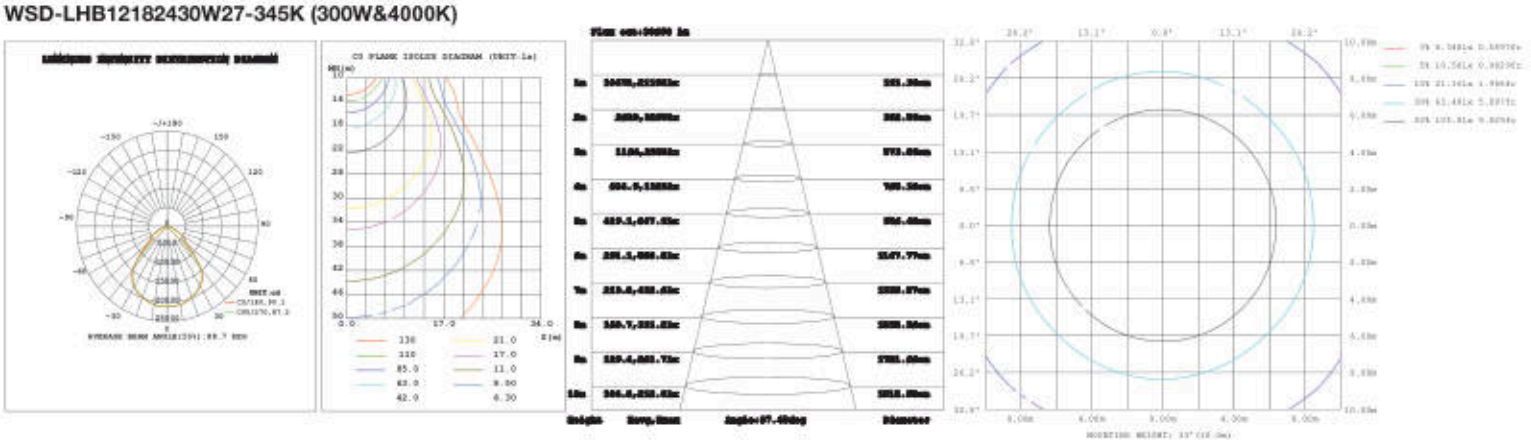

WSD-LHB16243240W27-345K (400W&4000K)

