Emergency LED Driver
WSD-EMPK04E27-4W

Features:

- Meet most of safety standards for lighting
- Standard CSA C22.2 NO.141,UL924
- Internal lithium battery
- Battery protections:over charge protection,over discharge protection,short circuit protection
- Indicator shows a variety working modes
- The batteries meet 500 cycles of standard charge and discharge

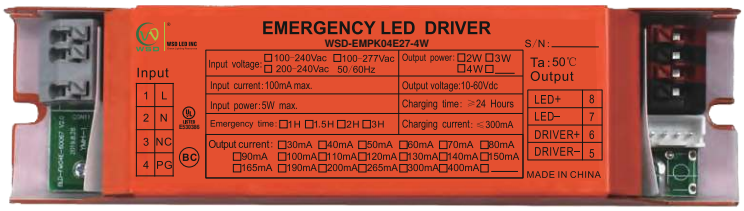



LISTED
E530386

Specifications:

Output Power
4W
Emergency Time
1.5H
Universal Input Voltage
100-277Vac, 50/60Hz
AC Input Current
100mA max.
AC Input Power Rating
5.0W max.
Output Current and Voltage
30-400mA 10-60Vdc
Full Warranty
5 Years
Test Switch Indicator Light
Illuminated Test Switch,
indicator Light
Battery
Li-ion battery-3.7V/2500mAh
Battery Charging Current
300mA max.
Charging Time
≥24Hours
Temperature Rating（Ambient）
Li-ion 5°C to +50°C (41°F to 122°F)

Operation:

AC Operation:
AC power is present,The LED load from the LED driver is normal power supply, AC LED driver output current can not exceed 50W or 1A,the emergency driver is charging in a standby mode,The red LED light on to indicate that it is charging.

Emergency operation:
When the AC power goes out,The emergency driver detects the AC power outage and automatically switch to the working emergency mode.The red LED light off.When the AC power is restored,the emergency driver backs to AC power working and starts re-charging, the red LED light on.

Dimensions:

Case- 5.5"x1.37"x0.86"(140mmx35mmx22mm)

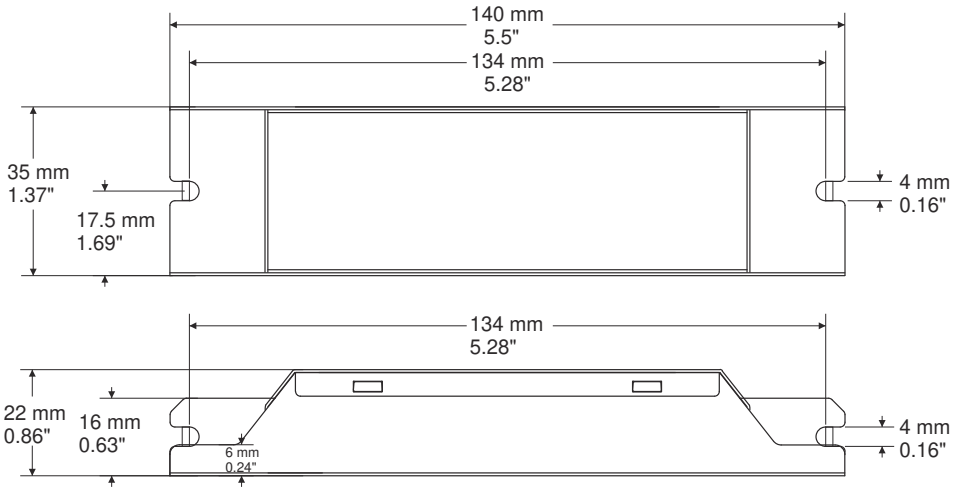

Accessory:

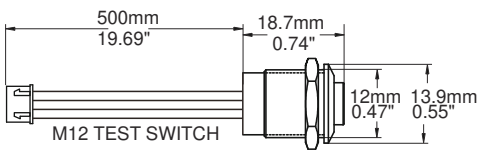

Emergency LED Driver
WSD-EMPK04E27-4W

Wiring Diagram:

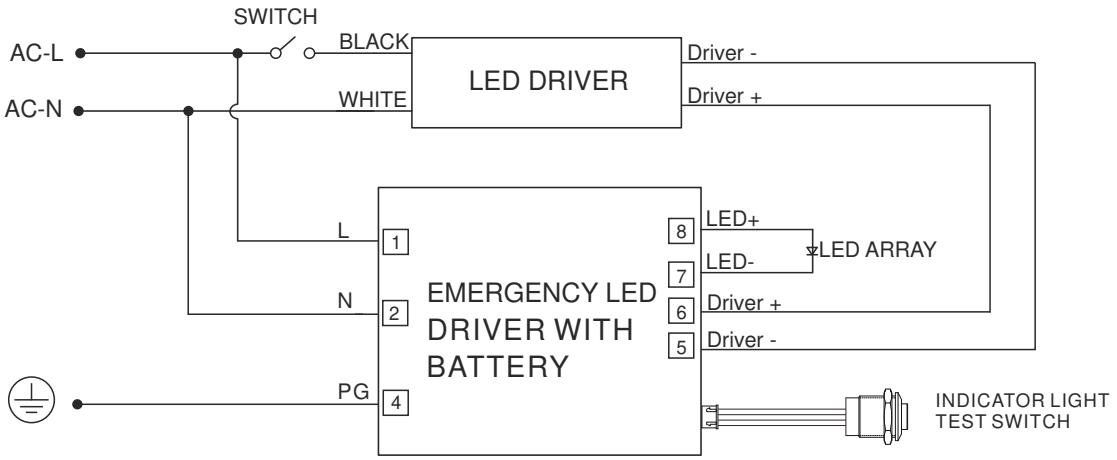

1.DO NOT MATE CONNECTOR UNTIL INSTALLATION IS COMPLETE AND AC POWER IS SUPPLIED.

2.TEST ACCESSORY LEADS-OBSERVE PROPER POLARITY WIRING.

IMPORTANT SAFEGUARDS

When using electrical equipment, basic safety precautions should always be followed including the following:

READ AND FOLLOW ALL SAFETY INSTRUCTIONS.

- IMPORTANT: Customers are advised to charge emergency LED driver 24 hours every 6 months during storage.
- Risk of fire or electric shock.Luminaire wiring and electrical parts may be damaged when drilling for installation of LED Emergency Backup. Check for enclosed wiring and components.
- Risk of fire or electric shock.This LED Emergency Backup installation requires knowledge of luminaires electrical systems.If not qualifed, do not attempt installation.Contact a qualifed electrician.
- Before installing, make certain the AC power to the fixture is off.
- The electrical rating of this product is 100-277Vac.Installer must confirm that there is 100-277Vac the fixture before installation.
- To prevent electrical shock, only mate unit connector after installation is complete and before the AC power to the fixture is back on.
- Do not use outdoors.
- This LED Emergency Backup unit requires an un-switched AC power source of 100-277Vac, 50/60Hz The AC driver must be on the same branch circuit as the LED Emergency Backup unit.
- Do not let power supply cords touch hot surfaces.
- Do not mount near gas or electric heaters.
- Do not join battery pack connecter until all other wiring is complete and AC power is on.
- The emergency LED driver is for use with grounded,ULlisted LED luminaires,shall be enclosed by the LED luminaire and bonded to the grounding of LED luminaire.
- Verify that all replacement lamp types marked on the installed luminaire are also identified as suitable for use with this emergency battery pack.
- The battery pack is fixed by the screw and the indicator lamp is attached to the shell of the luminaire by 3M tape
- Equipment should be mounted in locations and at heights where it will not be subjected to tampering by unauthorized personnel.
- The use of accessory equipment not recommended by the manufacturer may cause an unsafe condition.
- Do not use this equipment for other than its intended use.
- Use with grounded, UL Listed, dry or damp location rated fixtures.