Emergency LED Driver

WSD-EMS20W27-XX

Features:

- Meet most of safety standards for lighting
- Standard CSA C22.2 NO.141、UL924
- External lithium battery
- Battery protections:over charge protection,over discharge protection short circuit protection
- Indicator shows a variety working modes
- The batteries Meet 500 cycles of standard CH and standard DCH
- Emergency 1.5H

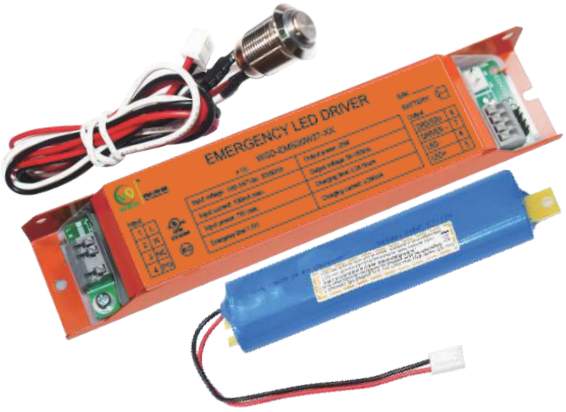

c UL us LISTED E530386

BC

Specifications:

Universal Input Voltage
100-347Vac, 50/60Hz

AC Input Current
100mA max.

AC Input Power Rating
7.0W max.

Output Current and Voltage
100-416mA 240mA

Output Voltage
36-150 Vdc

Output Power
20W

Emergency Time
≥1.5H

Full Warranty
5 Years

Test Switch Indicator Light
Illuminated Test Switch, indicator Light

Battery
Li-ion battery-14.4V/3350mAH

Battery Charging Current
250mA

Charging Time
≥24Hours

Temperature Rating（Ambient）
Li-ion 5°C to +50°C (41°F to 122°F)

Accessory:

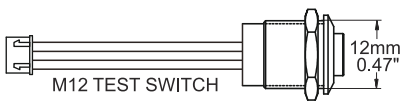

Operation:

AC Operation:
AC power is present,The LED load from the LED driver is normal power supply, AC LED driver output current can not exceed150W or 4A,the emergency driver is charging in a standby mode,The red LED light on to indicate that it is charging.

Emergency operation:
When the AC power goes out,The emergency driver detects the AC power outage and automatically switch to the working emergency mode.The red LED light off.When the AC power is restored,the emergency driver backs to AC power working and starts re-charging, the red LED light on.

Dimensions:

Case-7.4"x1.5"x1.14"(mounting center-7.0")
Battery 6.06"x1.48"(mounting center-5.67")

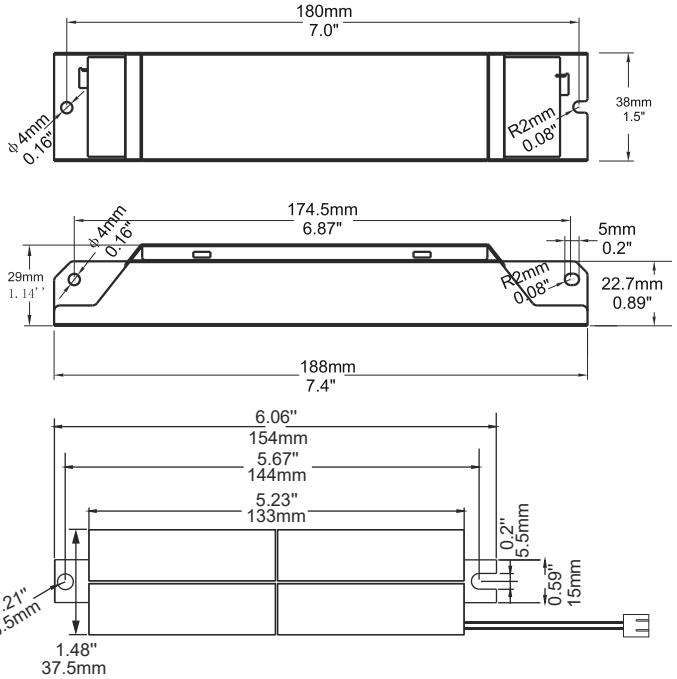

Emergency LED Driver

WSD-EMS20W27-XX

Wiring Diagram:

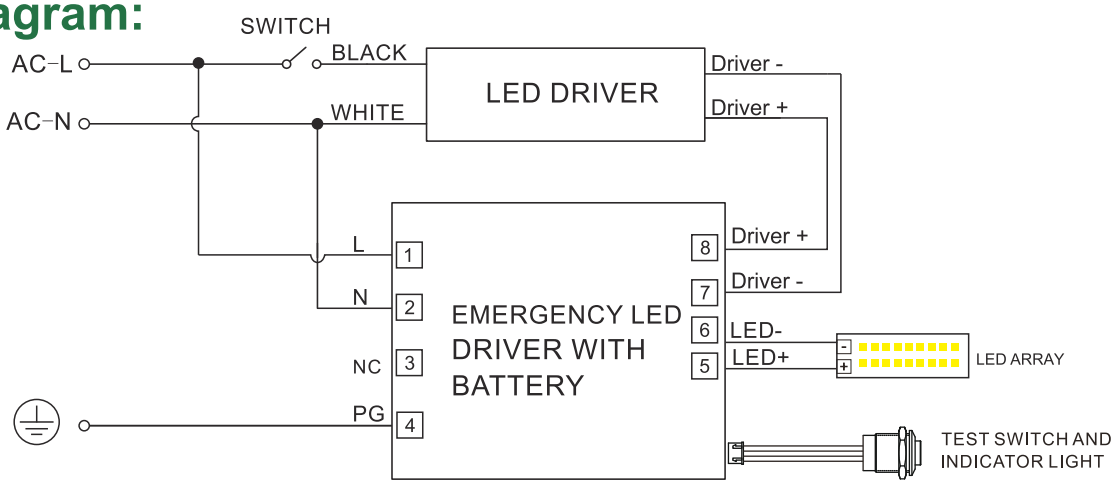

1.DO NOT MATE CONNECTOR UNTILINSTALLATION IS COMPLETE AND AC POWER IS SUPPLIED.
2.TESTACCESSORY LEADS-OBSERVE PROPER POLARITYWIRING.
3.DURING EMERGENCY MODE,PRESS TEST SWITCH TWICE TO CUT OFF THE EMERGENCY.

IMPORTANT SAFEGUARDS

When using electrical equipment, basic safety precautions should always be followed including the following:

READ AND FOLLOW ALL SAFETY INSTRUCTIONS.

- IMPORTANT: Customers are advised to charge emergency LED driver 24 hours every 6 months during storage.
- IMPORTANT: Lighting fixture manufacturers, electricians, and end-users need to ensure product system compatibility test before using and final installation.
- Risk of fire or electric shock.Luminaire wiring and electrical parts may be damaged when drilling for installation of LED Emergency Backup. Check for enclosed wiring and components.
- Risk of fire or electric shock.This LED Emergency Backup installation requires knowledge of luminaire electrical systems.If not qualified, do not attempt installation.Contact a qualified electrician.
- Before installing, make certain the AC power to the fixture is off.
- The electrical rating of this product is 100-347Vac.Installer must confirm that there is 100-347Vac to the fixture before installation.
- To prevent electrical shock only mate unit connector after installation is complete and before the AC power to the fixture is back on.
- Do not use outdoors.
- This LED Emergency Backup unit requires an un-switched AC power source of 100-347Vac, 50/60Hz The AC driver must be on the same branch circuit as the LED Emergency Backup unit.
- Do not let power supply cords touch hot surfaces.
- Do not mount near gas or electric heaters.
- Do not connect battery pack connector until all other wiring is complete and AC power is on.
- The emergency LED driver is for use with grounded,ULlisted LED luminaires,shall be enclosed by the LED luminaire and bonded to the grounding of LED luminaire.
- Verify that all replacement lamp types marked on the installed luminaire are also identified as suitable for use with this emergency battery pack.
- Equipment should be mounted in locations and at heights where it is not be subjected to tampering by unauthorized personnel.
- The use of accessory equipment is not recommended by the manufacturer and may cause an unsafe condition.
- Do not use this equipment for other than its intended use.
- Use with grounded, UL Listed, dry or damp location rated fixtures.