Selectable Compact LED Linear High Bay

WSD LED INC
Green Lighting Resources

Wattage: 100W,115W, 135W ; 155W, 185W, 200W ; 200W, 230W, 270W; 270W, 340W, 400W



WATT/CCT SELECTABLE

The Linear High Bay with its all-in-one, lightweight and slim with multiple mounting situations available put it at the top of the list for any high ceiling area where super bright light is needed. The LED Linear High bay Light Series can be widely used for indoor excellent for warehouse, industry building, factories, fitness center, and many other applications.

Lighting controls meet design lights consortium (DLC) networked lighting control system technical requirements, LLLC, Energy Monitoring and High End Trim function.

MESH RANGE	60ft node-to-node and 500ft node-to-Gateway (Commissioning)

FEATURES

- Optical design, greatly improved the light utilization an evenness.
- High efficiency LED Driver, voltage AC120-277/277-480V.
- Rugged galvanized rolled iron plate housing, better cooling, light quality, LED Tj < 85°C.
- Continuous Dimming, 10% - 100%.
- It uses a 3.5 mm port base.
- 12Vdc auxiliary dimming
- Wireless bluetooth system and Motion sensor control available (Optional) Installation height: Max 40 ft



Bluetooth® (Option)

Easy field-install motion sensor

SPECIFICATION				
TYPE	WSD-LHB1.4F100115135W27-45K	WSD-LHB1.9F155185200W27-45K	WSD-LHB2.6F200230270W27-45K	WSD-LHB3.7F270340400W27-45K
WATTAGE	100W/115W/135W	155W/185W/200W	200W/230W/270W	270W/340W/400W
LUMEN	15923 lm/17709lm/19917lm	24488 lm/28685lm/30421lm	31180 lm/34782lm/39773lm	41668 lm/50558lm/56154lm
EFFICACY	>155 lm/W	>150 lm/W	>150 lm/W	>150 lm/W
CCT	4000K/5000K			
CRI	>80			
FACTORY SETTINGS	135W & 4000K	200W & 4000K	270W & 4000K	400W & 4000K
INPUT VOLTAGE	AC120-277V / AC277-480V			
LIGHT ANGLE	90X95°			
POWER FACTOR	0.98			
DRIVER EFFICACY	90%			
LIFE SPAN	over 75,000 hrs			
WORKING TEMPERATURE	-4°F ~ 122°F			
PROTECTION LEVEL	Damp location			
CABLE	Input connect, No cable			
CABLE	3core,18AWG 3.94 inch			
LLLC NAME	GEBC			
WARRANTY	5 year limited			

Selectable Compact LED Linear High Bay

WSD LED INC
Green Lighting Resources

Wattage: 100W,115W, 135W; 155W, 185W, 200W ; 200W, 230W, 270W; 270W, 340W, 400W

DIMENSION

1.4FT

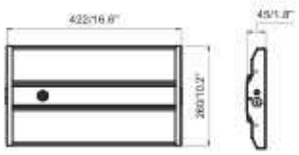

WATTAGE	100W,115W,135W
GR. WEIGHT	5.7 lbs
BOX DIM.	17.3"x10.6"x2"(1pcs/CTN)
	17.8"x8.7"x11"(4pcs/CTN)

1.9FT

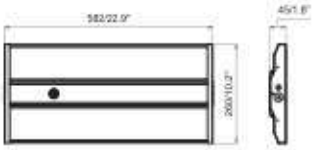

WATTAGE	155W,185W,200W
GR. WEIGHT	7.3 lbs
BOX DIM.	23.6"x10.6"x2"(1pcs/CTN)
	24.1"x8.7"x11"(4pcs/CTN)

2.6FT



WATTAGE	200W,230W,270W
GR. WEIGHT	10.4 lbs
BOX DIM.	31.9"x10.6"x2"(1pcs/CTN)
	32.4"x8.7"x11"(4pcs/CTN)

3.7FT

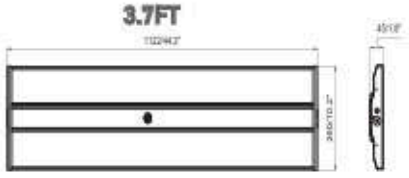

WATTAGE	270W,340W,400W
GR. WEIGHT	13.7 lbs
BOX DIM.	44.9"x10.6"x2"(1pcs/CTN)
	45.9"x11.1"x4.3"(2pcs/CTN)

CONTROL (SOLD SEPARATELY)



Bluetooth

NLC-BT-MW-SR-001
Bluetooth Microwave Fixture Sensor
(Silvair Bluetooth)



Bluetooth

NLC-BT-MW-GE-001
Bluetooth Microwave Fixture Sensor
(GEBC Bluetooth)



NLC-MW-PT-002
Bi -level microwave Sensor



NLC-PIR-PT-001
Bi - Level PIR Motion Sensor



RC-100
Remote Controller
(With NLC-MW-PT-002 and NLC-PIR-PT-001 use)



BRI-WS204-GE
4-Button Wireless Wall Switch
(Can only be used for NLC-BT-MW-GE-001)

CONTROL MODULE

WATT/CCT
FIELD-ADJUSTABLE

Simply select desired CCT and Wattage before installation



EMERGENCY BACK-UP (SOLD SEPARATELY)



WSD-EML08W27-XX/WSD-EML15W27-XX/WSD-EML20W27-XX
8W/15W/20W Emergency Backup Battery LED Driver
Available only for ≤200W low-voltage (120-277Vac) Luminaire models



BLD-GM40D-YYY
40W Emergency Backup Battery LED Driver
Available only for ≤400W low-voltage (120-277Vac) Luminaire models

Selectable Compact LED Linear High Bay

WSD LED INC

Wattage: 100W,115W, 135W ; 155W, 185W, 200W ; 200W, 230W, 270W; 270W, 340W, 400W

WSD-LHB-TBAR Mounting Kit(SOLD SEPARATELY)

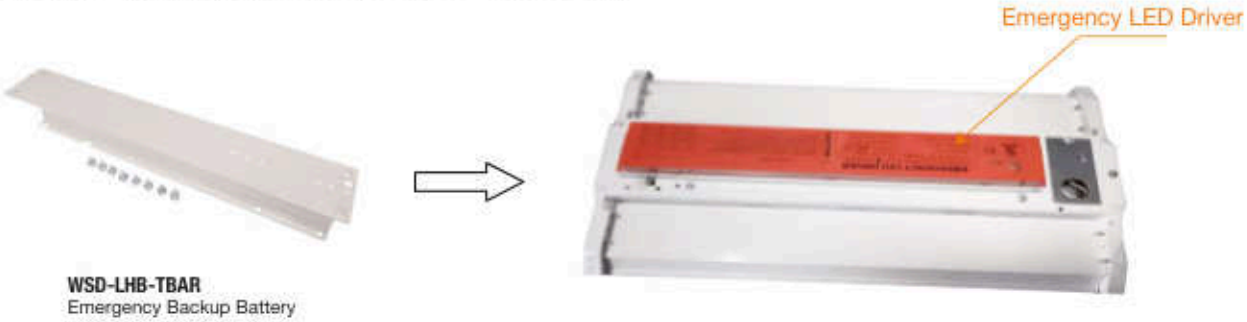

WSD-LHB-TBAR
Emergency Backup Battery
LED Driver Mounting Kit

LIGHT DISTRIBUTION CHANGEABLE (OPTION)

General and Aisle light distribution changeable by quickly replacing lens.



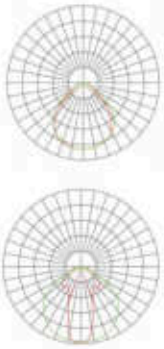

Conventional luminous Angle:

PMMA LENS：90X95°-1.4ft
PMMA LENS：90X95°-1.9ft
PMMA LENS：90X95°-2.6ft
PMMA LENS：90X95°-3.7ft



Extremely narrow luminous Angle:

PMMA LENS：40X110°-1.4ft MODEL:WSD-1.4FTA40110-PMMA
PMMA LENS：40X110°-1.9ft MODEL:WSD-1.9FTA40110-PMMA
PMMA LENS：40X110°-2.6ft MODEL:WSD-2.6FTA40110-PMMA
PMMA LENS：40X110°-3.7ft MODEL:WSD-3.7FTA40110-PMMA

ORDERING INFORMATION

EXAMPLE: **WSD-LHB1.4F100115135W27-45K-E[Blank,M,]**

WSD	LHB	1.4F	100W	27	45K	E
PRODUCT	PRODUCT	SIZE	WATTAGE	VOLTAGE	CCT	CONTROL
WSD (WSD LED INC)	**LHB** (Linear Hig Bay)	**1.4F** (1.4-foot) **1.9F** (1.9-foot) **2.6F** (2.6-foot) **3.7F** (3.7-foot)	**100W** - (100W) **115W** - (115W) **135W** - (135W) **155W** - (155W) **185W** - (185W) **200W** - (200W) **230W** - (230W) **270W** - (270W) **340W** - (340W) **400W** - (400W)	**27** (AC120-277V)	**45K** - (4000K/5000K)	**M** Motion Sensor

Selectable Compact LED Linear High Bay

WSD LED INC

Wattage: 100W,115W, 135W ; 155W, 185W, 200W ; 200W, 230W, 270W; 270W, 340W, 400W

WIRE GUARD (SOLD SEPARATELY)



WG-LHB-1.4FT100W-115W-135W
Wire guard for 100W/115W/135W

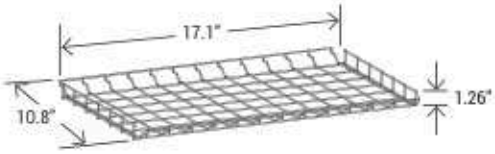



WG-LHB-1.9FT155W-185W-200W
Wire guard for 155W/185W/200W

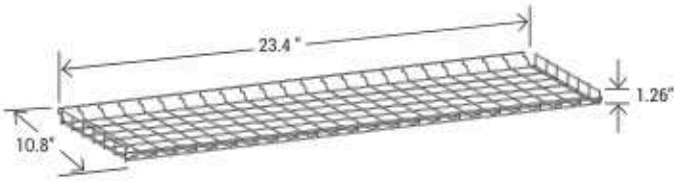

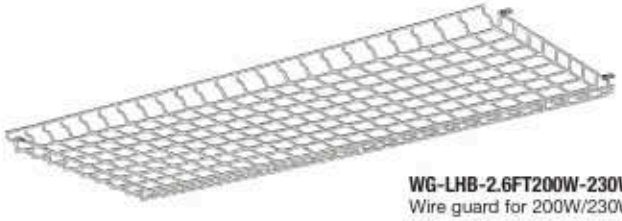

WG-LHB-2.6FT200W-230W-270W
Wire guard for 200W/230W/270W

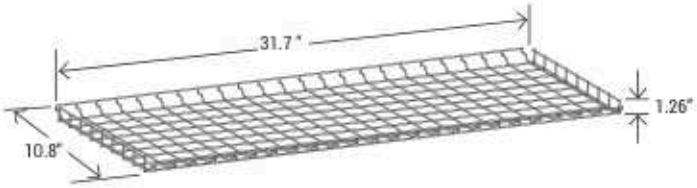

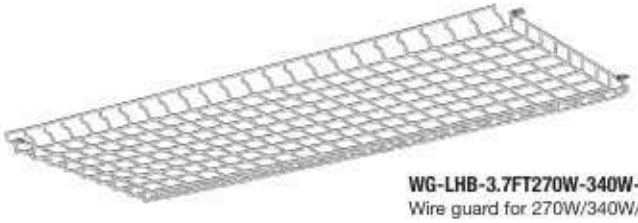

WG-LHB-3.7FT270W-340W-400W
Wire guard for 270W/340W/400W

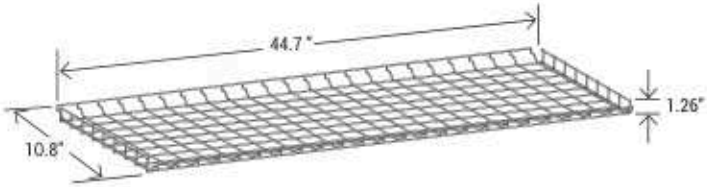

INCLUDED IN THE PACKAGE
(STANDARD)

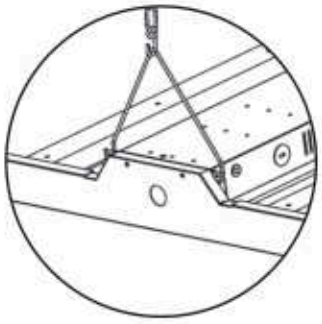

WSD-LHB-HOOK-CHAIN
41.34 inch CHAINS and HOOK

PENDANT MOUNTING BOX
(SOLD SEPARATELY)

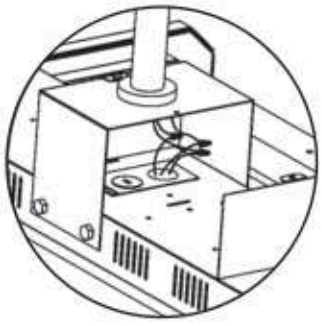

WSD-LHB-PMK-LID
Pendant Mounting Box

SURFACE MOUNT KIT
(SOLD SEPARATELY)

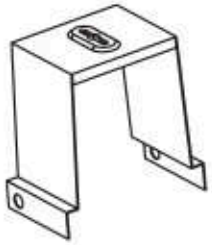

WSD-LHB-SMK
Surface mount kit



Wire guards

Selectable Compact LED Linear High Bay

WSD LED INC
Green Lighting Resources

Wattage: 100W,115W, 135W ; 155W, 185W, 200W ; 200W, 230W, 270W; 270W, 340W, 400W



NLC-BT-MW-SR-001
Plug and Play Network BLE Nodes and Sensor

The Bluetooth Lighting Control provides automated individual and group control of light fixtures using on sensors and Bluetooth sigmesh technology. The NLC-BT-MW-SR-001 mounted in an Commercial lighting fixture and provides multi-level control solution based on motion and or daylight harvesting contribution.

FEATURES

- Lighting controls meet design lights consortium (DLC) networked lighting control system technical requirements.
- Quick connect and adjust different sensor angle.
- Easy commissioning with Mobile App (Available in IOS or Android).
- Bluetooth network with Saas working by computer
- Individual addressability and/or grouping.
- Time clock scheduling for individual lights, groups or scenes.
- Multi-level dimming: manual ON/OFF automatic ON/OFF, and automatic partial ON/OFF, daylight harvesting control capability.

DIMENSION

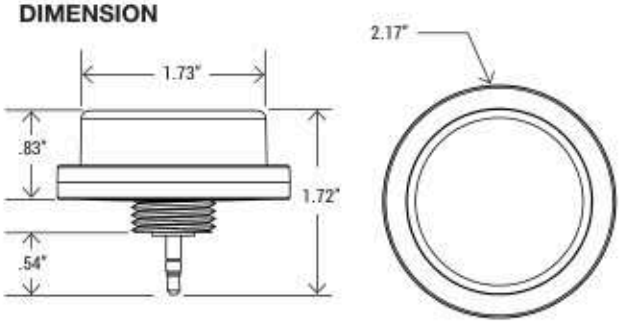

COVERAGE

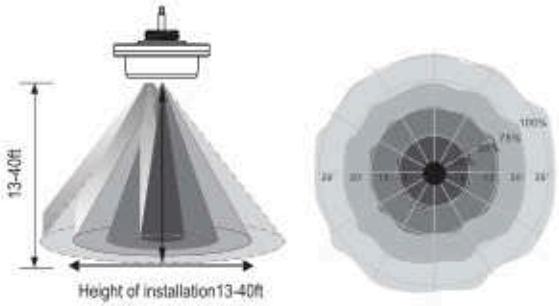

MICROWAVE SENSOR FEATURES	
DAYLIGHT HARVESTING	On/Off
MOTION SENSING	On/Off
FIRST TIME DELAY	1-59 mins/infinite
SECOND TIME DELAY	0-59 mins/infinite
DIM LEVEL	0-100%
MOUNTING HEIGHT	13-40ft
DETECTION RANGE	up to 52ft diameter
DETECTION: HORIZONTAL	360°
DETECTION: VERTICAL	90°

SPECIFICATION	
NETWORK BLE MESH	Yes
DAYLIGHT HARVESTING	Yes
MICROWAVE MOTION SENSOR	Yes
DETECTION MODE	Occupancy/Vancancy/Bi-level in 1 Unit
OPERATING VOLTAGE	12-24V DC
OPERATING CURRENT	>50mA
SINKING CURRENT	max. 25mA
CONTROL OUTPUT	0-10V
RADIO FREQUENCY	2.4GHz ± 75MHz
WIRELESS STANDARD	BLE 5.0 MESH
PRORGRAMMING	Silvair iOS App (IOS or Android)
CYBERSECURITY	UL
ENCRYPTION	AES 128-bit
MESH RANGE	60ft node-to-node and 500ft node-to-device (Commissioning)
SAFETY	cULus Listed
FCC	FCC
OPERATING TEMP.	-20°C - +60°C
IP RATING	IP65
WARRANTY	5 year limited

COMMISSIONING

Silvair iOS App or Android makes it easy to pair devices, create groups, set scenes/schedules, customize dimming levels, and adjust high trim based on application needs.

Please scan and download the app.

Silvair App

iOS

Operation Instruction:
https://youtu.be/8KWPK7z_Tng

Android:

When using silvair, you can search for silvair in Android Google play to download and install it

Selectable Compact LED Linear High Bay

WSD LED INC
Green Lighting Resources

Wattage: 100W,115W, 135W ; 155W, 185W, 200W ; 200W, 230W, 270W; 270W, 340W, 400W

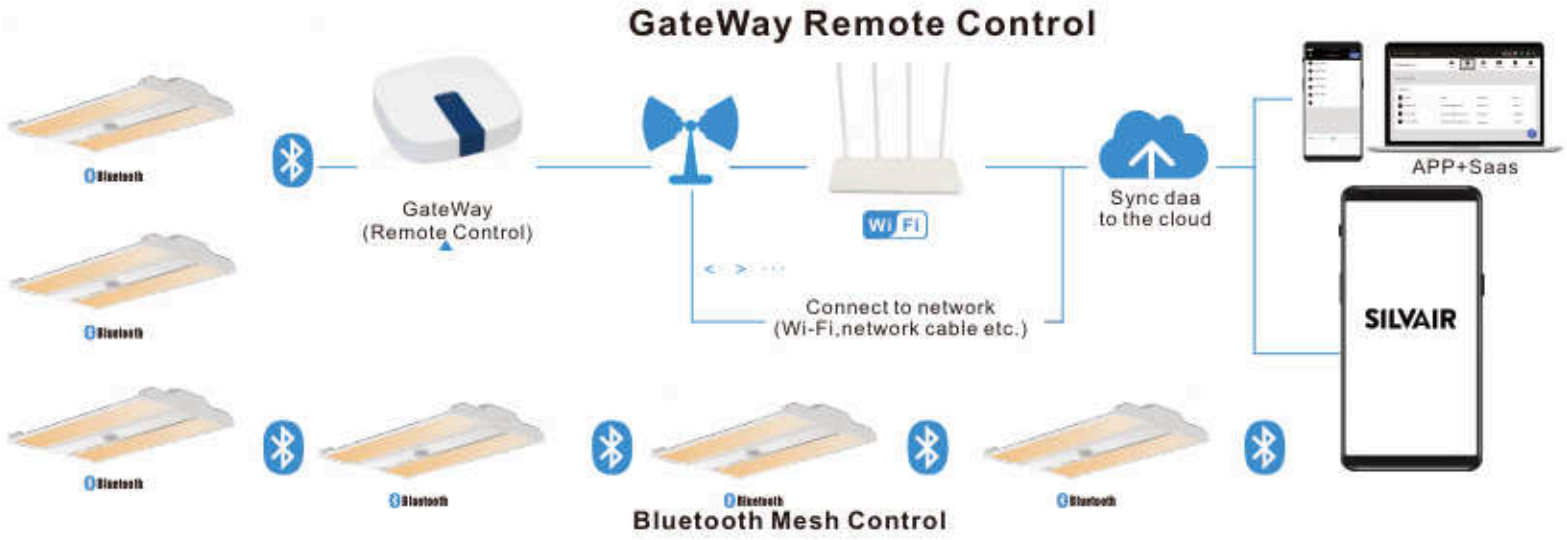



INDUSTRIAL GATEWAY

SGW-101
Smart Engineering Gateway

The Silvair Gateway connects Bluetooth mesh networks that have been commissioned using the Silvair Commissioning tools to the Silvair cloud. This allows the scheduling of events and delivery of services based on the data generated by these networks.

Functions:

The Silvair Gateway enables the following functions in the Silvair web app:
- Scheduling (available by default)
  - Scheduling changes in scenes and lighting control scenarios (for example occupancy sensing,daylight harvesting) for specific times or days.
- Energyand occupancy monitoring (additional paid service)
  - Visualizing energy use and occupancy via the Silvair web app.
  - Downloading energy and occupancy via the Silvair web app and cloud-based API.
- Remote monitoring and control (additional paid service)
  - Low-latency monitoring of the status of devices in the network via API.
  - Low-latency control of devices in the network via API.
- System diagnostics
  - Monitoring of the status of Bluetooth mesh networks.
  - Remote troubleshooting of networking issues.

Features:

- Future-proof Linux operating system.
- Simple commissioning using the Silvair Commissioning tools.
- Automatic connection to the Silvair cloud.
- Secure provisioning with secure IDs and encrypted keys.
- High level of hardware and software security (secure boot and encrypted file system can only be accessed with the management platform).
- Automatic security updates.
- Prompt releases of OS updates and fixes to vulnerabilities.
- Low-latency transfer of network, luminaire, and sensor status data to the Silvair cloud.
- Schedule caching.
- Automatic remote firmware updates.
- Display of gateway and network performance metrics (requires the Silvair web app).

SPECIFICATION

POWER SUPPLY	4.5–5.5 V DC, 2 A Power over Ethernet 36–57 V DC (IEEE 802.3af)
OPERATING SYSTEM	Ubuntu Core
PROCESSOR	i.MX6ULL (Y2), 32-bit ARM 800 MHz
MEMORY	512 MB DDR3L SDRAM 8GB eMMC
COMMUNICATION PROTOCOLS	Bluetooth mesh (2.4 GHz Bluetooth Low Energy) Wi-Fi 802.11a/b/g/n/ac (2.4/5 GHz) 4G LTE Cat 1 with 2G/3G (only for Cascade-500-W and Cascade-500-X gateways)
PORTS	1 x RJ45 10/100 Ethernet 1 x USB 2.0 Type-A 2 x external dipole antenna, 5 dBi (only for Cascade-500-W and Cascade-500-X gateways)
REQUIRED AMBIENT TEMPERATURE	0°C to 60°C 32°F to 140°F
ENCLOSURE DIMENSIONS	127 mm x 127 mm x 30 mm (5 inch x 5 inch x 1.2 inch)
MOUNTING POSITION	Wall or surface mounted. As close to the geometrical center of the lighting network as possible, but as far as possible from potential sources of interference.
SECURITY	Secure boot with encrypted operating system Secure communication with the Silvair Cloud over Internet (TLS) Secure communication with devices over qualified Bluetooth mesh

Selectable Compact LED Linear High Bay

WSD LED INC
Green Lighting Resources

Wattage: 100W,115W, 135W ; 155W, 185W, 200W ; 200W, 230W, 270W; 270W, 340W, 400W

PHOTOMETRICS

For complete IES files, please visit our website.

WSD-LHB1.4F100115135W27-45K

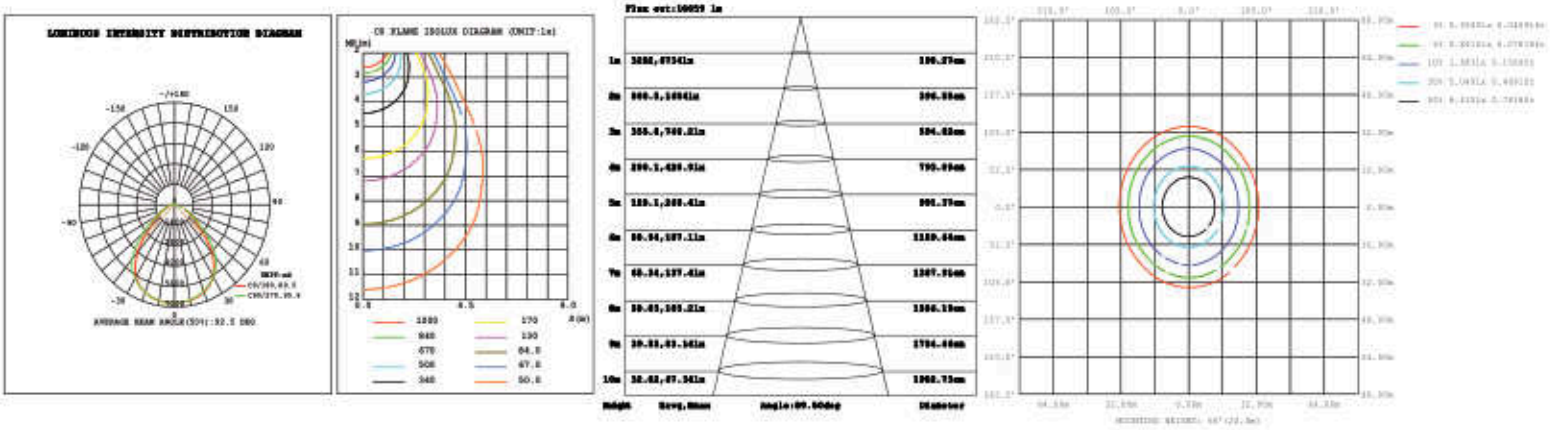

WSD-LHB1.9F155185200W27-45K

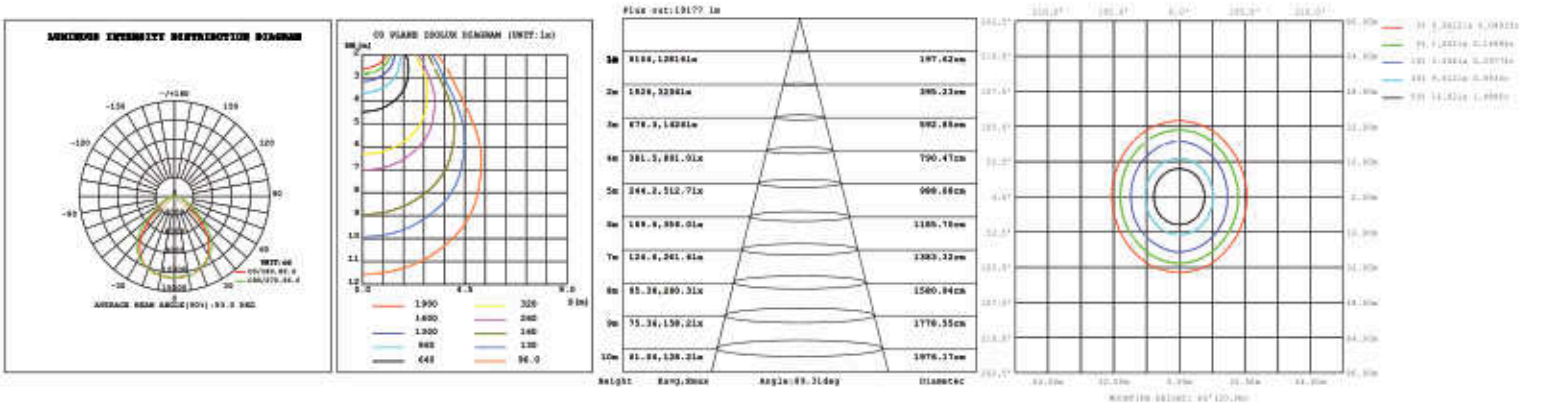

WSD-LHB2.6F200230270W27-45K

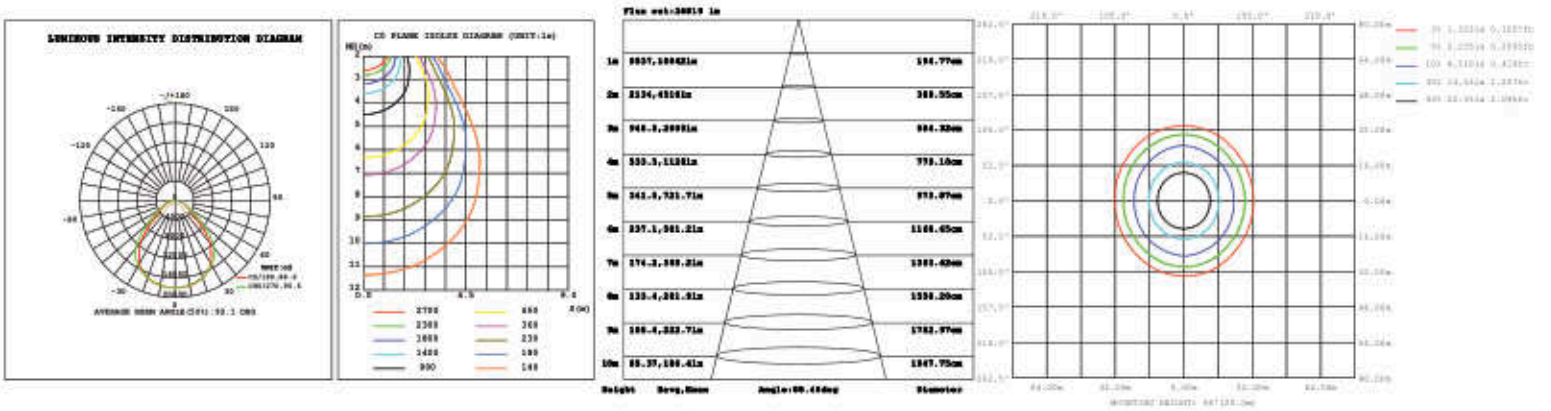

Selectable Compact LED Linear High Bay

WSD LED INC
Green Lighting Resources

Wattage: 100W,115W, 135W ; 155W, 185W, 200W ; 200W, 230W, 270W; 270W, 340W, 400W

PHOTOMETRICS

For complete IES files, please visit our website.

WSD-LHB3.7F270340400W27-45K

