LED UFO High Bay Light

Wattages: 100W, 150W, 200W



LED UFO High Bay Light series can be widely used in outdoor or indoor lighting(Wet location),Excellent for Museums,Underground parking lot,Workshop, warehouse, gymnasiumand many more applications.

- LED high luminous efficiency and long working life.
- High efficiency LED Driver, the wide range input voltage AC120-277V.
- Die-cast aluminum cooling design, high quality and better cooling for LED Tj < 85°C.
- Excellent optics design, greatly improve the light utilization and evenness.
- Wireless bluetooth system and Motion sensor control available (Optional)

Structure Features:

- Shell materials: Aluminum & PC
- Finish:BLACK(Standard)
- Net weight : 100W:2.33Kg (5.14 lbs)
  150W:2.43Kg (5.36 lbs)
  200W:2.98Kg (6.57 lbs)
- P roduct Size : 100-150W:φ272.7X57.1mm
  (10.74"X2.25")
  200W:φ320.5X57.1mm
  (12.62"X2.25")
- Carton Size : 100-150W:290X290X145mm
  (11.42"X11.42"X5.71")
  200W:335X335X145mm
  (13.19"X13.19"X5.71")

DIMENSION:

100-150W

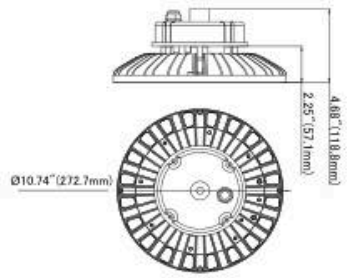

200W

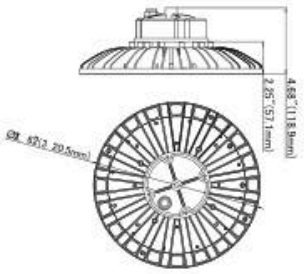

SPECIFICATION			
WATTAGE	100W	150W	200W
LUMEN	16799 lm	24000 lm	32000 lm
EFFICACY	> 160 lm/W	> 160 lm/W	> 160 lm/W
CCT	4000K, 5000K		
CRI	70		
INPUT VOLTAGE	AC120-277V / 277-480V		
BEAM ANGLE	89°		
POWER FACTOR	0.95		
DRIVER EFFICACY	90%		
DIMMING	0-10V dimming 12V Auxiliary power		
LIFE SPAN	over 50,000 hrs		
WORKING TEMPERATURE	-22°F ~ 113°F		
STORAGE TEMPERATURE	-40°F ~ 176°F		
OUTDOOR RATING	Wet location		
CABLE	3 core, 18AWG (300mm)		
WARRANTY	5 year limited		

LED UFO High Bay Light

Wattages: 100W, 150W, 200W

Bluetooth® MOTION SENSOR and Bluetooth options (Option)

Hook (Standard)

Optical lens is made of high quality PC material to make the light even and soft.





High performance, die cast heat sink transfers heat from the light engine to the environment, via large coolinigns, drawing heat away from the i xture, and extending the lifespan of the LEDs.



Top tier LEDs are driven well below recommended safety limits, on both drive current and junction temperature, to keep components cool – maintaining the life of the LED, allowing for a compact and eficient heat sink design.

EMERGENCY BACK-UP (SOLD SEPARATELY)



WSD-EMUFO40W347-R
40W Emergency Backup Battery

CONTROL (SOLD SEPARATELY)



Bluetooth
NLC-BT-MW-SR-001
Bluetooth Microwave Fixture Sensor
(Silvair Bluetooth)



Bluetooth
NLC-BT-MW-GE-001
Bluetooth Microwave Fixture Sensor
(GEBC Bluetooth)



NLC-MW-PT-002
Bi -level microwave Sensor



RC100
Remote Controller
(With NLC-MW-PT-002 use)

MOUNTING(OPTION)



Trunnion
Item: UFO-T
Trunnion, Mainly used for indoor or outdoor ceiling installation, can be directly mounted on the ceiling.

ACCESSORIES(SOLD SEPARATELY)

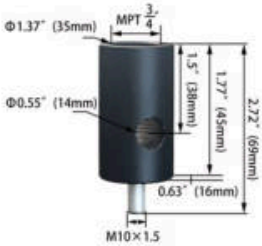

UFO High Bay Lights Pendant Adaptor
Item: PDUFO-M10-3/4
Main Parameters: bottom screw M10, top thread NTP3/4"
Material: Aluminum

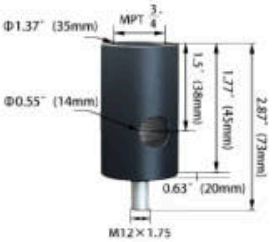

UFO High Bay Lights Pendant Adaptor
Item: PDUFO-M12-3/4
Main Parameters: bottom screw M12, top thread NTP3/4"
Material: Aluminum



Glare shield on lens bottom
Item: UFO-BPC
Main Parameters:
φ15.9"(404mm)X1.5"(40mm)



The PC cover
Item: UFO-150PC/UFO-200PC
Main Parameters:
100-150W:φ16.3"(413mm)X6.0"(153mm)
200W:φ16.3"(413mm)X7.8"(199mm)

ORDERING INFORMATION

EXAMPLE: **WSD-UFO10W27-XXK-Z[D,W,B,S]-U[H,T]-E[BLANK,M]-G2 / WSD-UFO10W48-XXK-Z[D,W,B,S]-U[H,T]-E[BLANK,M]-G2**

WSD	UFO	10W	27	XXK	Z	U	E	G2
COMPANY	PRODUCT	WATTAGE	VOLTAGE	CCT	FINISH	MOUNTING	CONTROL	G2
WSD LED INC	**UFO** (UFO High Bay Light)	**10W** - (100W) **15W** - (150W) **20W** - (200W)	**27** (AC120-277V) **48** (AC277-480V)	**40K** - (4000K) **50K** - (5000K)	**D** - (Dark Bronze) **W** - (White) **B** - (Black) **S** - (Silver)	**H** -(Hook) **T** -(Trunnion)	**M** -(Motion Sensor)	**G2**-(Second generation)

LED UFO High Bay Light

WSD LED INC
Green Lighting Resources

Wattages: 100W, 150W, 200W



NLC-BT-MW-SR-001
Plug and Play Network BLE Nodes and Sensor

The Bluetooth Lighting Control provides automated individual and group control of light fixtures using on sensors and Bluetooth sigmesh technology. The NLC-BT-MW-SR-001 mounted in an Commercial lighting fixture and provides multi-level control solution based on motion and or daylight harvesting contribution.

FEATURES

- Lighting controls meet design lights consortium (DLC) networked lighting control system technical requirements.
- Quick connect and adjust different sensor angle.
- Easy commissioning with Mobile App (Available in IOS).
- Bluetooth network with Saas working by computer
- Individual addressability and/or grouping.
- Time clock scheduling for individual lights, groups or scenes.
- Multi-level dimming: manual ON/OFF automatic ON/OFF, and automatic partial ON/OFF, daylight harvesting control capability.

DIMENSION

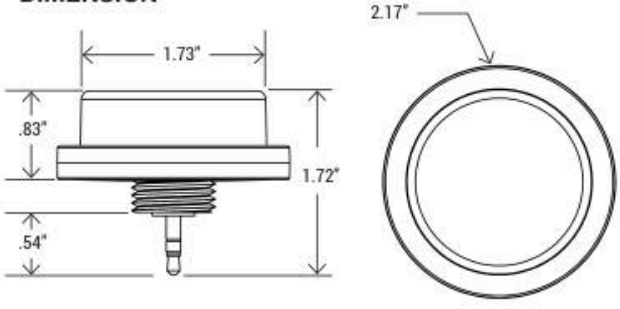

COVERAGE

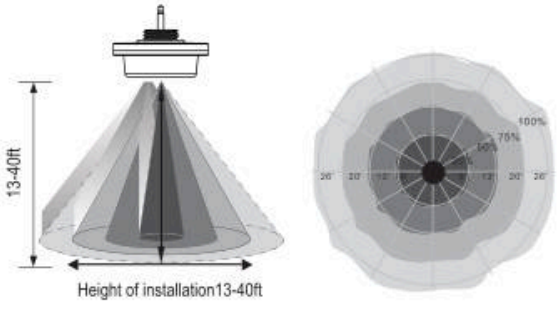

MICROWAVE SENSOR FEATURES	
DAYLIGHT HARVESTING	On/Off
MOTION SENSING	On/Off
FIRST TIME DELAY	1-59 mins/infinite
SECOND TIME DELAY	0-59 mins/infinite
DIM LEVEL	0-100%
MOUNTING HEIGHT	13-40ft
DETECTION RANGE	up to 52ft diameter
DETECTION: HORIZONTAL	360°
DETECTION: VERTICAL	90°

SPECIFICATION	
NETWORK BLE MESH	Yes
DAYLIGHT HARVESTING	Yes
MICROWAVE MOTION SENSOR	Yes
DETECTION MODE	Occupancy/Vancancy/Bi-level in 1 Unit
OPERATING VOLTAGE	12-24V DC
OPERATING CURRENT	>50mA
SINKING CURRENT	max. 25mA
CONTROL OUTPUT	0-10V
RADIO FREQUENCY	2.4GHz ± 75MHz
WIRELESS STANDARD	BLE 5.0 MESH
PRORGRAMMING	Silvair iOS App (IOS)
CYBERSECURITY	UL
ENCRYPTION	AES 128-bit
MESH RANGE	60ft node-to-node and 500ft node-to-device (Commissioning)
SAFETY	cULus Listed
FCC	FCC
OPERATING TEMP.	-20°C - +60°C
IP RATING	IP65
WARRANTY	5 year limited

COMMISSIONING

Silvair iOS App makes it easy to pair devices, create groups, set scenes/schedules, customize dimming levels, and adjust high trim based on application needs.

Silvair App

Please scan and download the app.

iOS

Operation Instruction:
https://youtu.be/8KWPK7z_Tng

LED UFO High Bay Light

WSD LED INC
Green Lighting Resources

Wattages: 100W, 150W, 200W

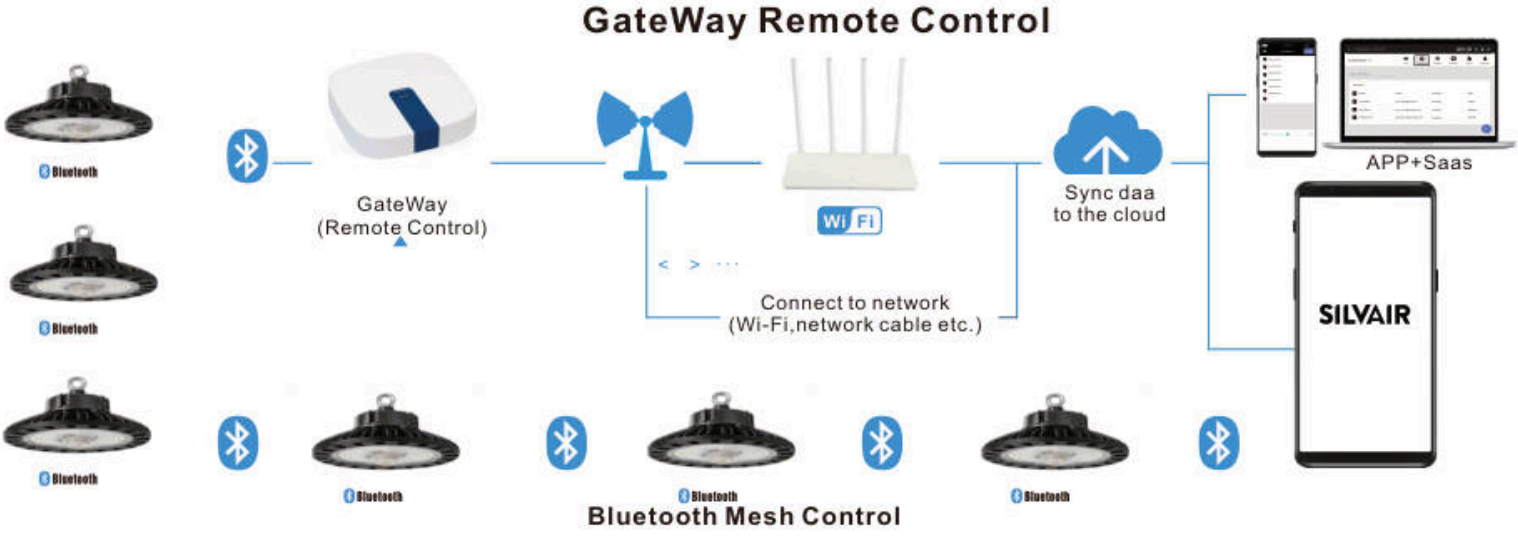



Functions:

The Silvair Gateway enables the following functions in the Silvair web app: • Scheduling (available by default)

- ○Scheduling changes in scenes and lighting control scenarios (for example occupancy sensing,daylight harvesting) for specific times or days.

• Energyand occupancy monitoring (additional paid service)

- ○Visualizing energy use and occupancy via the Silvair web app.
- ○Downloading energy and occupancy via the Silvair web app and cloud-based API.

• Remote monitoring and control (additional paid service)

- ○ Low-latency monitoring of the status of devices in the network via API.
- ○ Low-latency control of devices in the network via API. • System diagnostics
- ○ Monitoring of the status of Bluetooth mesh networks.
- ○ Remote troubleshooting of networking issues.

Features:

- •Future-proof Linux operating system.
- •Simple commissioning using the Silvair Commissioning tools.
- •Automatic connection to the Silvair cloud.
- •Secure provisioning with secure IDs and encrypted keys.
- •High level of hardware and software security (secure boot and encrypted file system can only be accessed with the management platform).
- •Automatic security updates.
- •Prompt releases of OS updates and fixes to vulnerabilities.
- •Low-latency transfer of network, luminaire, and sensor status data to the Silvair cloud.
- •Schedule caching.
- •Automatic remote firmware updates.
- •Display of gateway and network performance metrics (requires the Silvair web app).

INDUSTRIAL GATEWAY

SGW-101
Smart Engineering Gateway

The Silvair Gateway connects Bluetooth mesh networks that have been commissioned using the Silvair Commissioning tools to the Silvair cloud. This allows the scheduling of events and delivery of services based on the data generated by these networks.

SPECIFICATION	
POWER SUPPLY	4.5–5.5 V DC, 2 A Power over Ethernet 36–57 V DC (IEEE 802.3af)
OPERATING SYSTEM	Ubuntu Core
PROCESSOR	i.MX6ULL (Y2), 32-bit ARM 800 MHz
MEMORY	512 MB DDR3L SDRAM 8GB eMMC
COMMUNICATION PROTOCOLS	Bluetooth mesh (2.4 GHz Bluetooth Low Energy) Wi-Fi 802.11a/b/g/n/ac (2.4/5 GHz) 4G LTE Cat 1 with 2G/3G (only for Cascade-500-W and Cascade-500-X gateways)
PORTS	1 x RJ45 10/100 Ethernet 1 x USB 2.0 Type-A 2 x external dipole antenna, 5 dBi (only for Cascade-500-W and Cascade-500-X gateways)
REQUIRED AMBIENT TEMPERATURE	0°C to 60°C 32°F to 140°F
ENCLOSURE DIMENSIONS	127 mm x 127 mm x 30 mm (5 inch x 5 inch x 1.2 inch)
MOUNTING POSITION	Wall or surface mounted. As close to the geometrical center of the lighting network as possible, but as far as possible from potential sources of interference.
SECURITY	Secure boot with encrypted operating system Secure communication with the Silvair Cloud over Internet (TLS) Secure communication with devices over qualified Bluetooth mesh

LED UFO High Bay Light

Wattages: 100W, 150W, 200W

PHOTOMETRICS

For complete IES iles, please visit our website.

WSD-UFO10W27-50K-B-H-G2

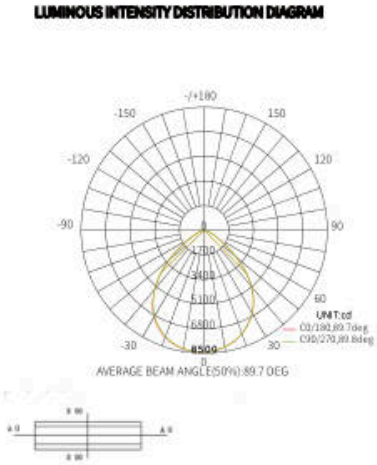

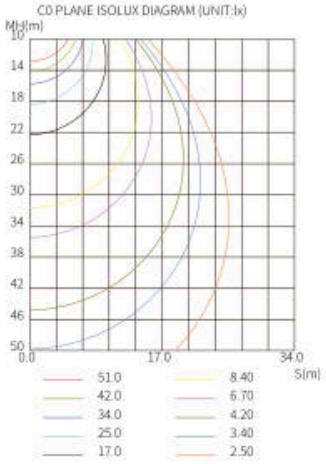

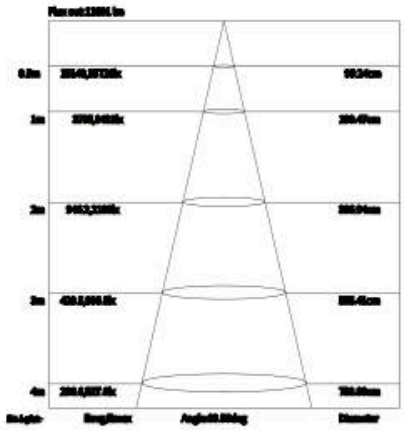

WSD-UFO15W27-50K-B-H-G2

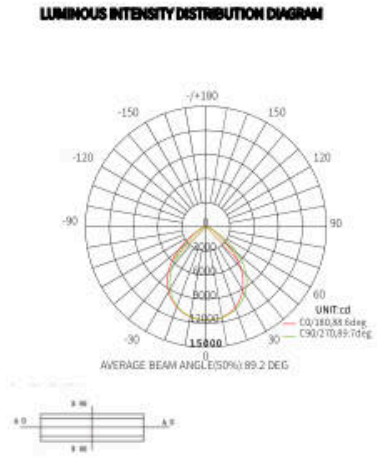

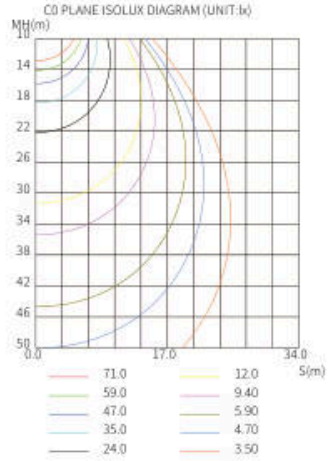

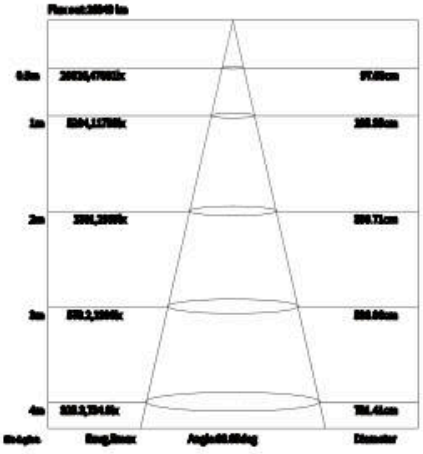

WSD-UFO20W27-50K-B-H-G2

