TRANSGLOBE LIGHTING

(818) 768-5511
(800) 446-9092
hello@tglighting.com
USA

Job Type : .....
Job Name : .....
Company : .....
Quantity : .....



70525-3
Mod Pod

Finish	Black
Finish Code	BK
Fixture Dimensions	20.5W x 26.0H
Bulb Type	Medium base (E-26)
Number of bulbs	3
Bulbs included	No
Wattage	60
Voltage	120
Location Rating	Dry
Canopy Dimensions	5.5W x 0.8H x 5.5D
Dimmable	Yes
Minimum Hanging Height	26
Maxinum Hanging Height	120
Sloped Ceiling adaptable	Yes
Shade Type	White Frosted
Illumination Direction	Ambient



BN
Brushed Nickel

PC
Polished Chrome

ROB
Rubbed Oil Bronze

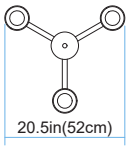

TOP VIEW

HEIGHT:26in(66cm) to 120in(305cm)
DIAMETER:20.5in(52cm)

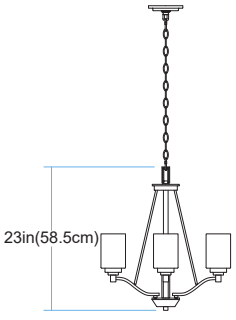

FRONT VIEW

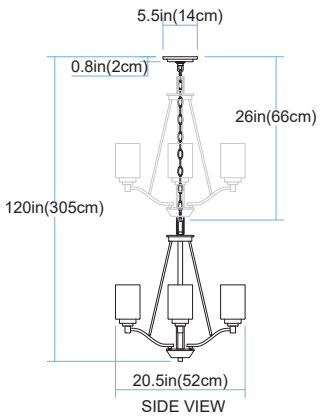

SIDE VIEW