LED

# 320 Series

32061 | White

32065 | Black

Wet

## Standard Specifications

| | |
|---|---|
| **Housing** | Commercial Grade Aluminum (Specify Finish)<br>**(Fixtures Marked ! Have A Polycarbonate Housing)** |
| **Frame** | Impact Resistant Polycarbonate |
| **Lens** | UV Stabilized Frosted Polycarbonate |
| **Certification** | Wet Location Listed |
| **Mounting** | Wall or Ceiling Mount<br>**(Except Wattages Marked @ Are Wall Mount Only)** |

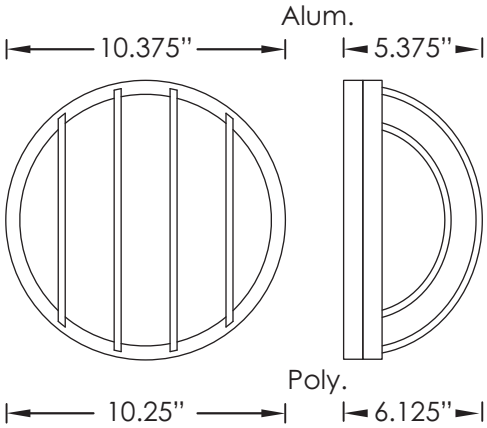


## Replacement Parts

| | |
|---|---|
| **LENS-3206** | UV Stabilized Frosted Polycarbonate Lens |
| **FRAME-32061** | White Polycarbonate Grill |
| **FRAME-32065** | Black Polycarbonate Grill |

| Product Family | Lens Type | Finish |
|---|---|---|
| 320 | 6 | |

**6** - Frosted

**1** - White

**5** - Black

### Option Legend

| | |
|---|---|
| **27K** | 2700 Kelvin Warm White Light Temperature |
| **30K** | 3000 Kelvin Warm White Light Temperature |
| **40K** | 4000 Kelvin Cool White Light Temperature |
| **PE** | Photocell (120 Volt Only) |

| Model | Features & Options* |
|---|---|
| **10LEDGU** | 120V, 60Hz Electronic, Triac Dimmable to 10%<br>9 Watts, 800 Lumens, >81 CRI, GU24 Base<br>**Options: 27K, 30K, 40K, PE** |
| **12LEDGU** | 120V, 60Hz Electronic, Triac Dimmable to 10%<br>11 Watts, 1100 Lumens, >81 CRI, GU24 Base<br>**Options: 27K, 30K, 40K, PE** |
| **13LED-120** | 120V, 50/60Hz Electronic, Triac Dimmable to 5%<br>13 Watts, 900 Lumens, >80 CRI, Energy Star Listed<br>**Options: 30K, 40K, PE** |
| **14LED-120** | 120V, 50/60Hz Electronic, 120V Dimmable<br>14 Watts, 1350 Lumens, >80CRI, Energy Star Listed<br>**Options: 30K, 40K, PE** |
| **18LED** | 120-277V, 50/60Hz Electronic, Non-Dimmable<br>22 Watts, 1704 Lumens, >80CRI, Energy Star Listed<br>**Options: 40K, PE** |
| **23LED-120** | 120V, 50/60Hz Electronic, 120V Dimmable<br>23 Watts, 1850 Lumens, >80CRI, Energy Star Listed<br>**Options: 30K, 40K, PE** |
| **2X10LEDGU @** | 120V, 60Hz Electronic, Triac Dimmable to 10%<br>18 Watts, 1600 Lumens, >81 CRI, 2x GU24 Base<br>**Options: 27K, 30K, 40K, PE** |
| **2X12LEDGU @** | 120V, 60Hz Electronic, Triac Dimmable to 10%<br>22 Watts, 2200 Lumens, >81 CRI, 2x GU24 Base<br>**Options: 27K, 30K, 40K, PE** |

* May not be available in all wattages or combinations, please call factory.
@ Wall Mount Only