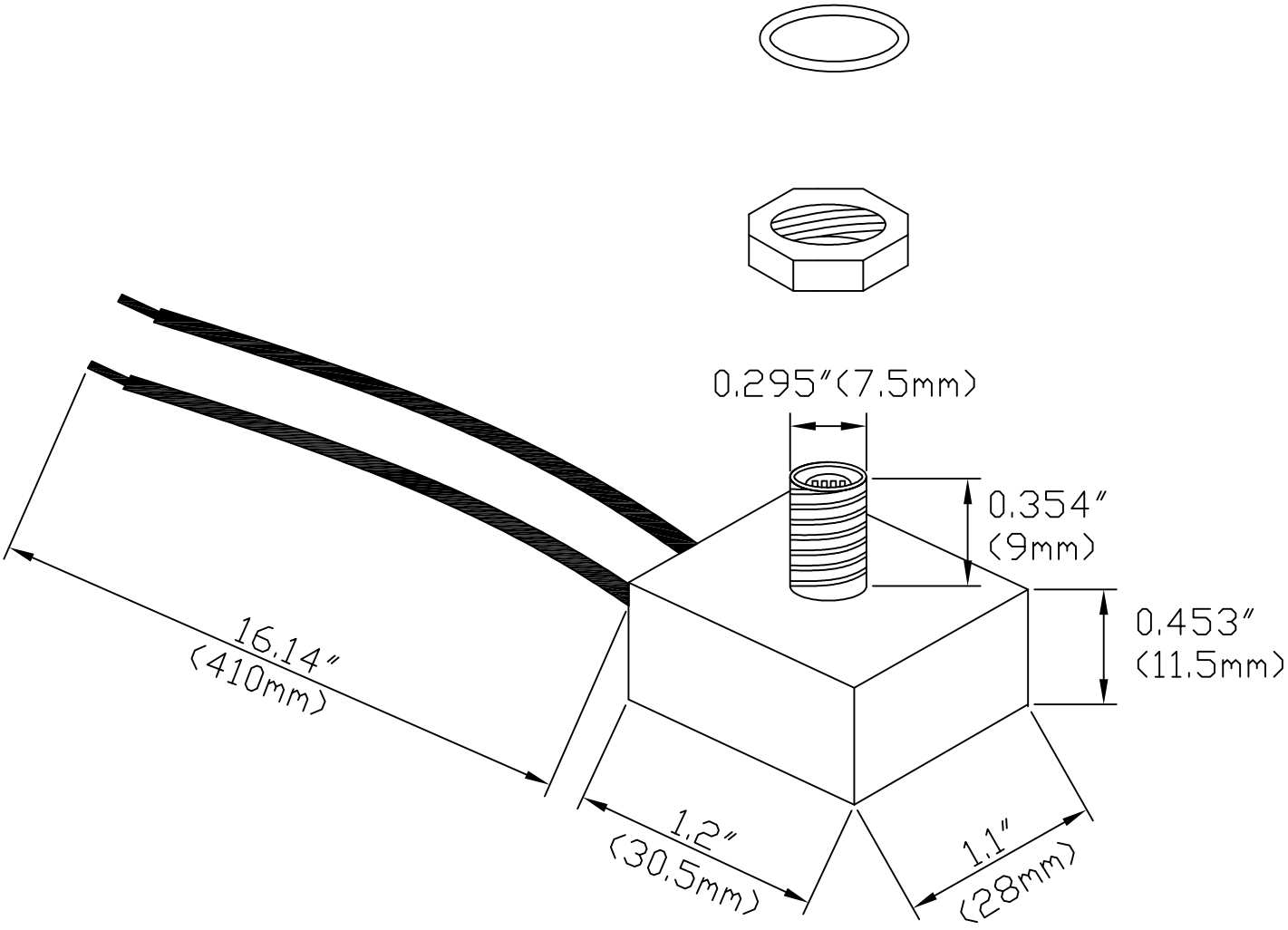
0.295″(7.5mm)
0.354″
(9mm)
0.453″
(11.5mm)
16.14″
(410mm)
1.2″
(30.5mm)
1.1″
(28mm)

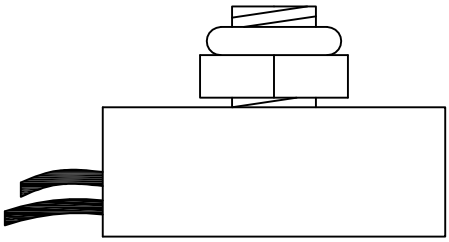

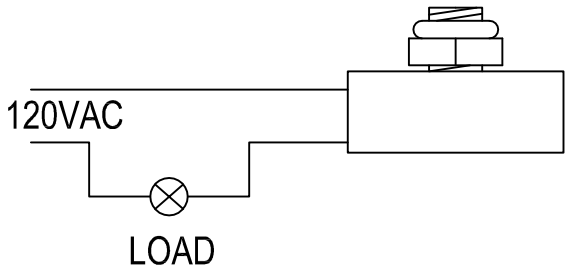
120VAC
LOAD