Installation Instruction

- Surface Mounting Kit

1. Connect **A-type** and **B-type** frames with plastic connectors. Assemble the entire Surface mount frame.

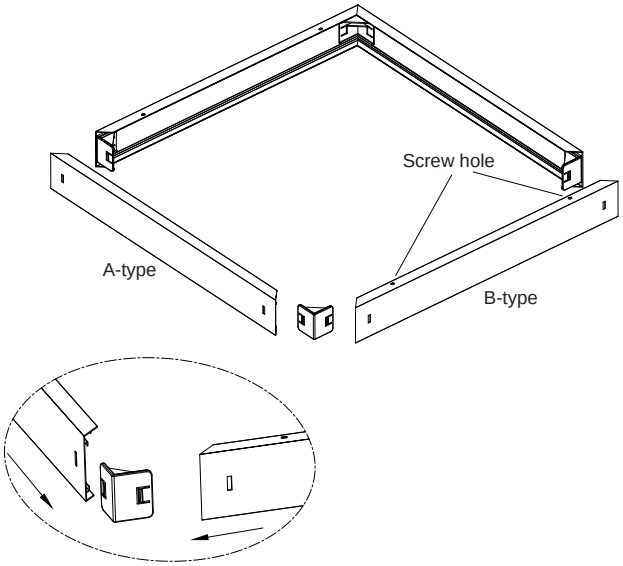

2. Attach the square frame as a positioning ruler to the ceiling, mark the screw holes, and secure the frame to the ceiling.

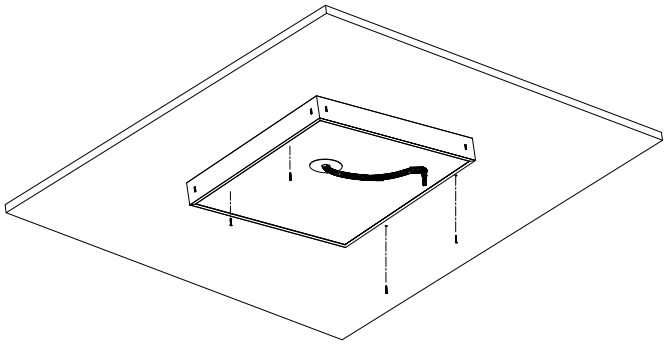



anchors and screws

3. Remove an A-type frame.

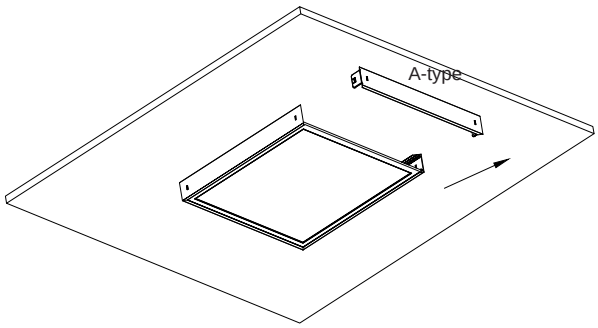

4. Make wiring connection to the main power according to local code and insert the fixture into the frames.

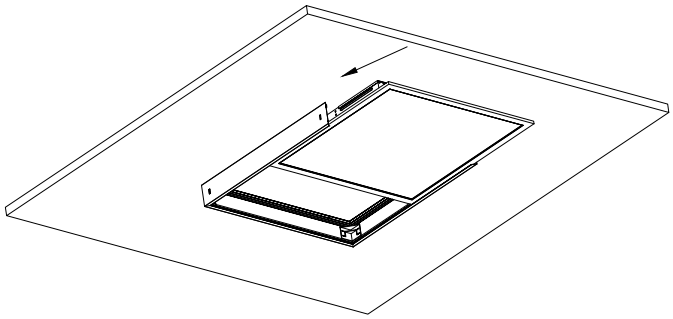

5. Replace the rest A-type frame into the slots, make sure it get locked tightly by connectors.

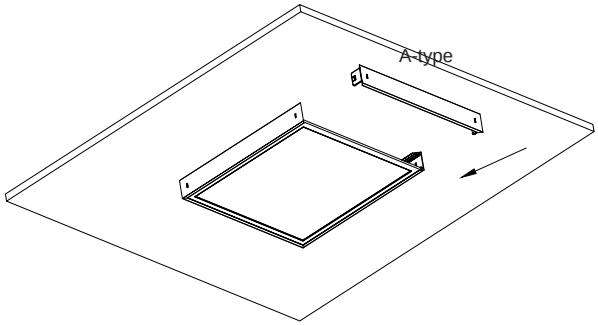

6. Installation is completed. Fixture is ready to power on.

