Installation Instruction

⚠ WARNING

- To reduce the risk of death, personal injury or property damage from fire, electric shock, falling parts, cuts/abrasions, and other hazards read all warnings and instructions included with and on the fixture box and all fixture labels.
- Before installing, servicing, or performing routine maintenance upon this equipment, follow these general precautions.
- Commercial installation, service and maintenance of luminaires should be performed by a qualified licensed electrician.
- For the installation: If you are unsure about the installation or maintenance of the luminaires, consult a qualified licensed electrician and check your local electrical code.
- To prevent wiring damage or abrasion, do not expose wiring to edges of sheet metal or other sharp objects.
- Do not make or alter any open holes in an enclosure of wiring or electrical components during kit installation.

⚠ WARNING

- Turn off electrical power at fuse or circuit breaker box before wiring fixture to the power supply.
- Turn off the power when you perform any maintenance.
- Verify that supply voltage is correct by comparing it with the luminaire label information.
- All wiring connections should be capped with UL approved wire connectors.

⚠ CAUTION

- Avoid direct eye exposure to the light source while it is on.
- Account for small parts and destroy packing material, as these may be hazardous to children.
- Risk of burn. Disconnect power and allow fixture to cool before changing bulb or handing fixture.

NOTICE: Green ground screw provided in proper location.Do not relocate.
NOTICE: Minimum 90°C supply conductors.
NOTICE: Specifications and dimensions subject to change without notice.
NOTICE: Suitable for Damp or Wet Location.

General Wiring Diagram

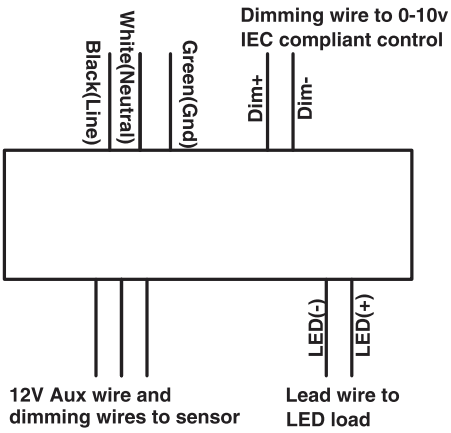

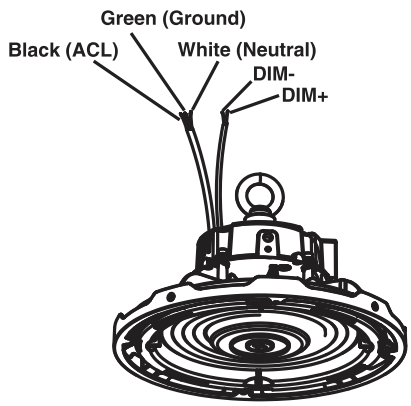

Installation Instruction

Notice:

Always turn off the power supply from main circuit breaker first!

Please refer to the diagram on the right to install the Safety cable.

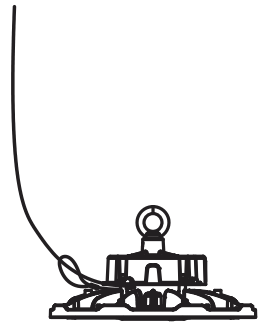

Installation Methods: Hook or Chain Mount, Pendant mount, Ceiling/Wall Mount
(Please choose the most suitable installation method for your application)

A) Hook or Chain mount (using Eyebolt)

1. Screw the eyebolt into the fxture and tighten it. (Figure 1)
2. Hang the fixture on the ceiling hook (Figure 2) or chain (Figure 3), then install the safety cable.
3. After installation, connect the wire of the fixture to the mains according to the local wiring rules.

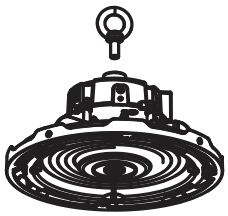

Figure 1



Figure 2

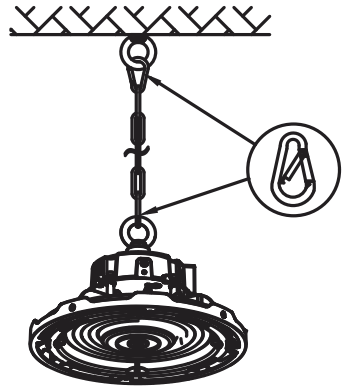

Figure 3

Safety cable,Ceiling hook,Lock and Chain are provided by others or sold separately.

B) Pendant Mount **(SOLD SEPARATELY)**

1. Remove the original hook from the driver. (Figure 4)
2. Install the adapter(purchased separately) and secure it to the driver using a screw (included with the adapter). (Figure 5)
3. Screw the adapter with the fixture onto a pole and secure it with an screw (included with the adapter). (Figure 6)

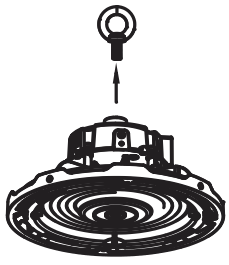

Figure 4

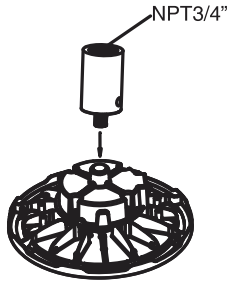

Figure 5

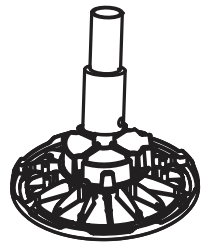

Figure 6

Installation Instruction

Notice: Always turn off the power supply from main circuit breaker first!

C) Ceiling mount (SOLD SEPARATELY)

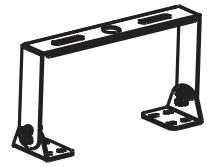

1. Using the Yoke mount bracket as a template, mark and drill holes in the ceiling. Use a hammer to install the anchors into the drilled holes. (Figure 7 and Figure 8)
2. Attach the U-shaped yoke mount bracket to the mounting surface utilizing appropriate hardware based upon the material of the ceiling (Figure 9)
3. Attach the L-shaped yoke mount brackets onto the fixture. (Figure 10)
4. Secure the fixture to the ceiling by combine the U-shaped and L-shaped brackets. (Figure 11)
5. After attaching the fixture to the ceiling, connect the wires of the fixture to the mains in accordance with local wiring rules and regulations. (Figure 12)

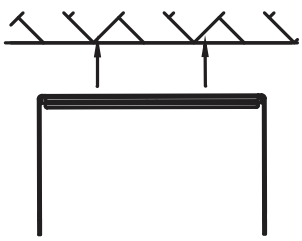

Figure 7

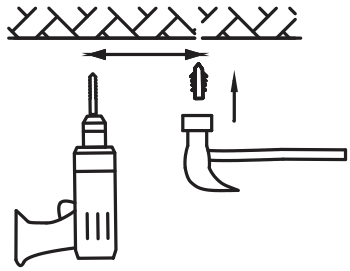

Figure 8

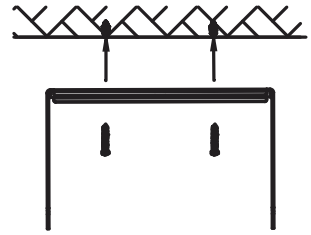

Figure 9

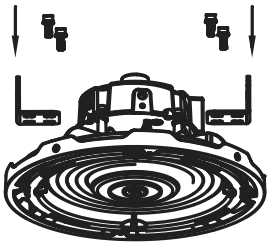

Figure 10

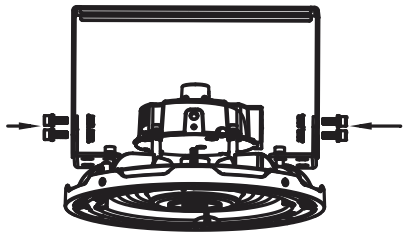

Figure 11

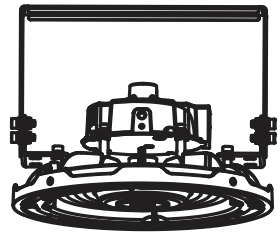

Figure 12

Surface mounting in multiple applications

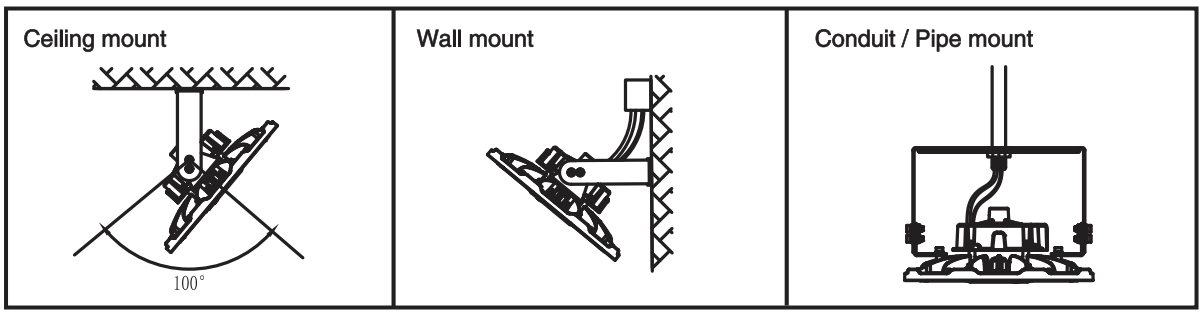

Please use dimming+, dimming- (DC 10V) marking leads to connect outside dimmer.
The pink wire and black wire with shrinkable tubing shall not be damaged (no connection). Class 1 Wiring Only.

Installation Instruction

Shade reflector and Wire Guard installation **(SOLD SEPARATELY)**

Install the Shade reflector or Wire Guard, then tighten the screws.

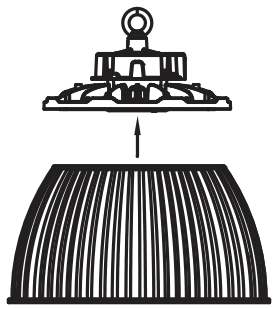

POLY CARBONATE shade reflector

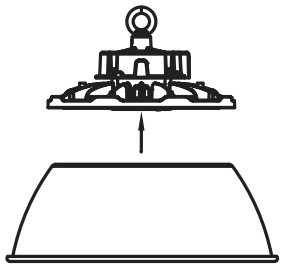

Metal shade reflector

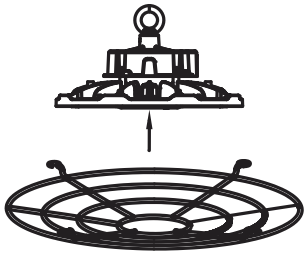

Wire Guard

Screw holes as shown below

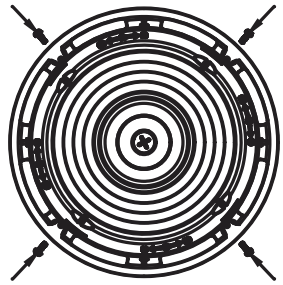

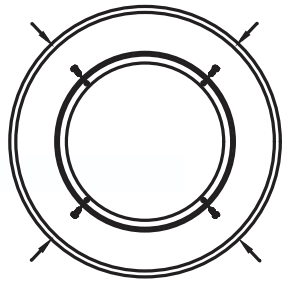

PC shade reflector cover installation **(SOLD SEPARATELY)**

Step 1. Cover the PC reflector cover onto the reflector, ensuring that the edges of both are flush.
Step 2. Install the Hose Clamp.
Step 3. Use the provided Stainless steel Double hook spring to secure the reflector cover onto the reflector.

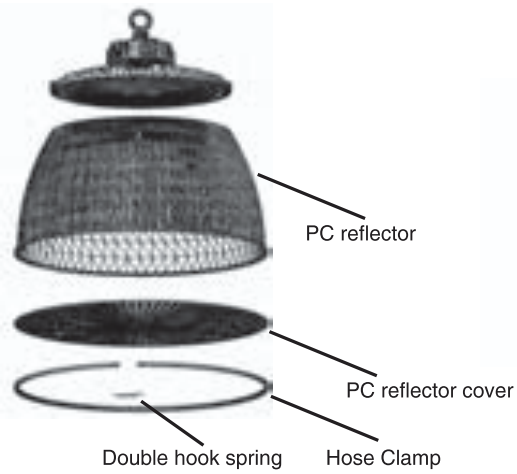



Installation Instruction

Notice: Always turn off the power supply from main circuit breaker first!

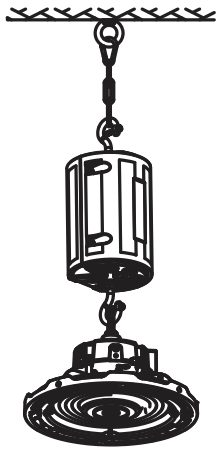

Additional accessory
Emergency **(SOLD SEPARATELY)**

General wiring diagram

Without Haisen sensor

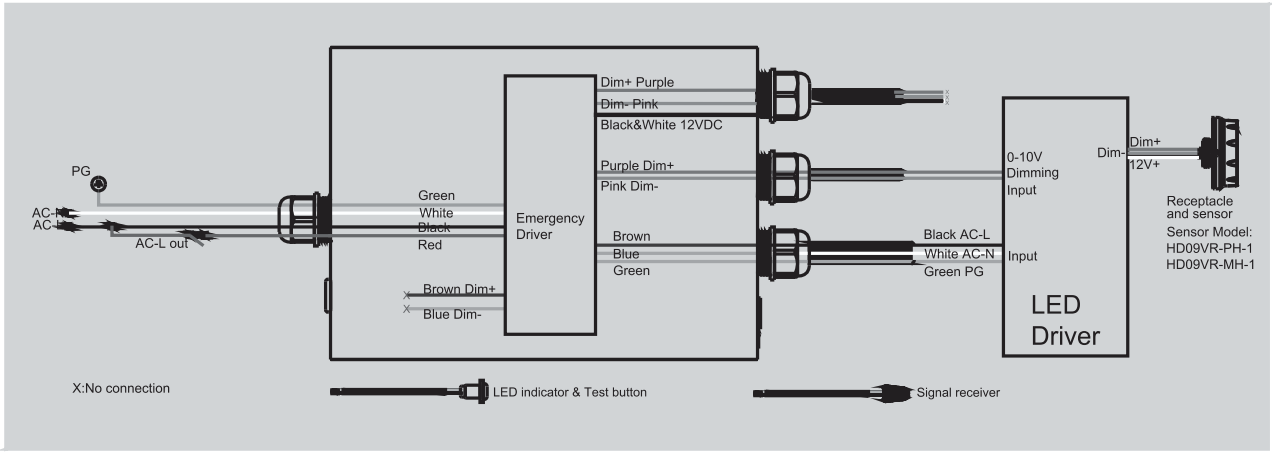

With other sensors

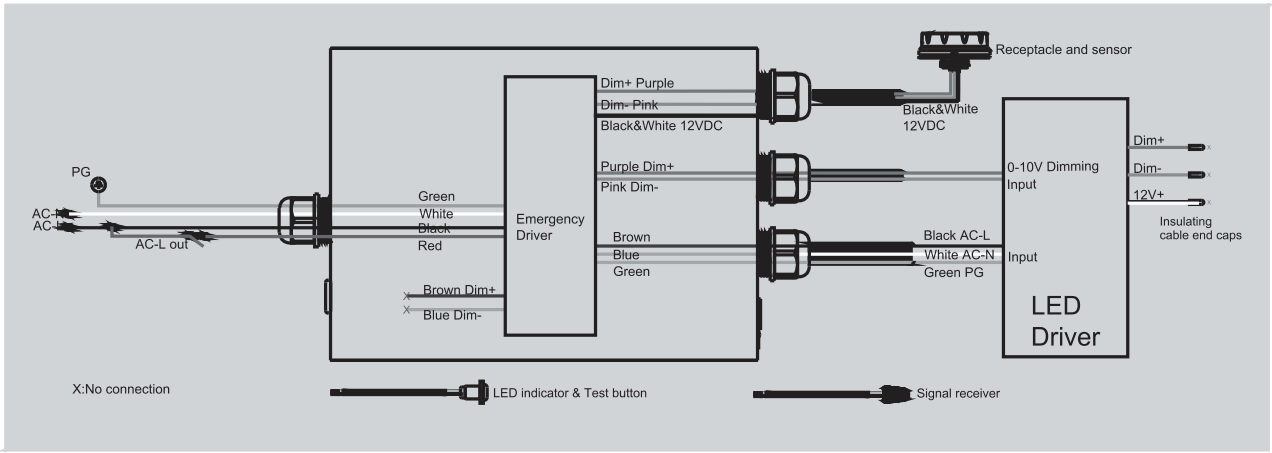

Installation Instruction

Notice: Always turn off the power supply from main circuit breaker first!

Additional accessory

Emergency **(SOLD SEPARATELY)**

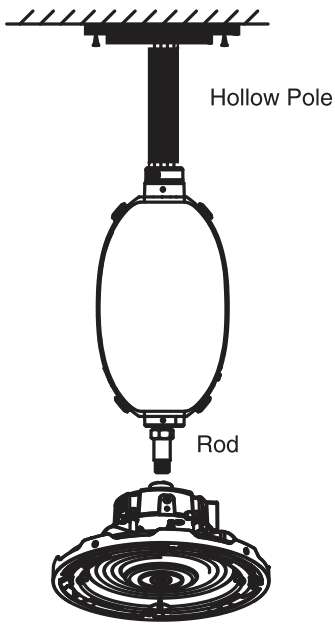

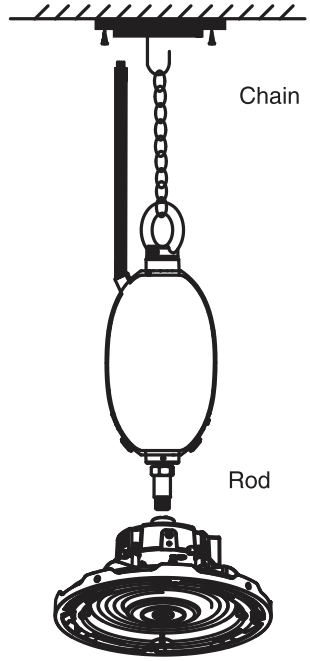

General wiring diagram

Without sensor

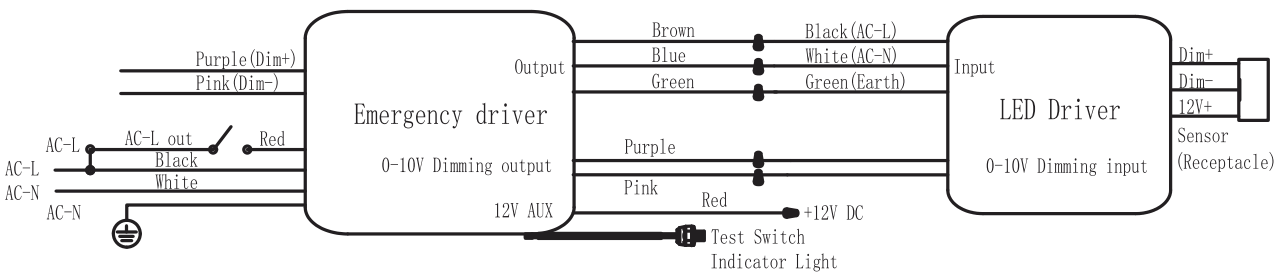

With sensor

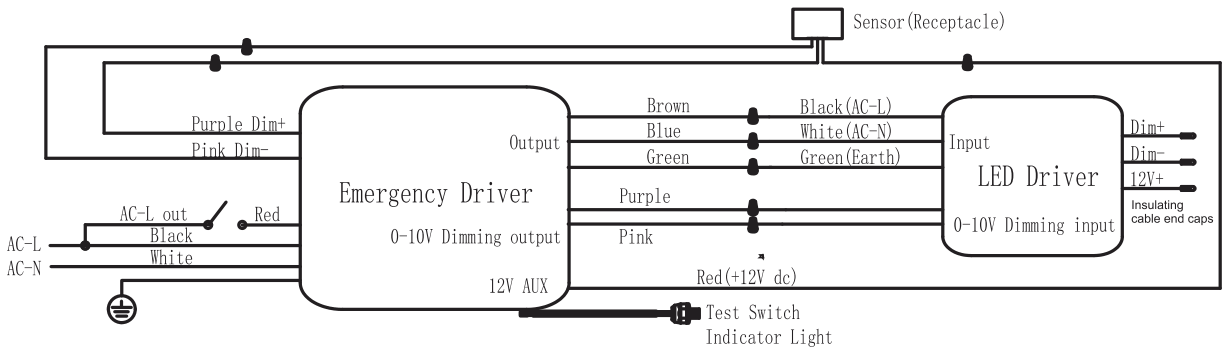

Installation Instruction

DC Motion Sensor Installation **(SOLD SEPARATELY)**

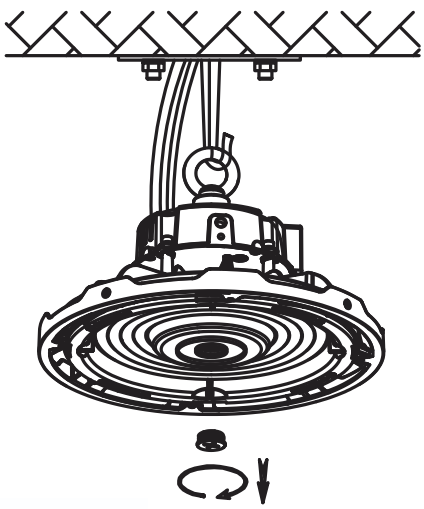

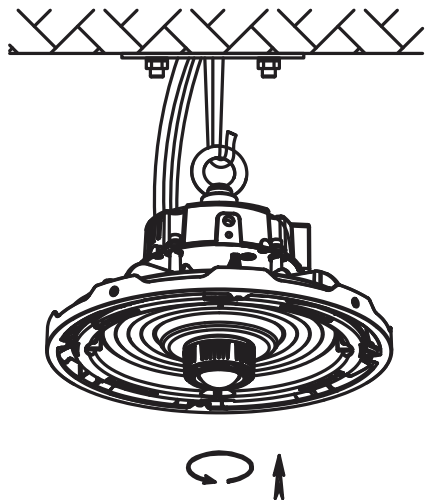

Installation steps:
1. Screw the 1/2" knockout out with screw driver.
2. Screw the sensor in.
3. Programming of the sensor is done with the remote-control unit (ordered separately).

CCT & Wattage Adjustment instruction
Notice: Always turn off the power supply from main circuit breaker first!

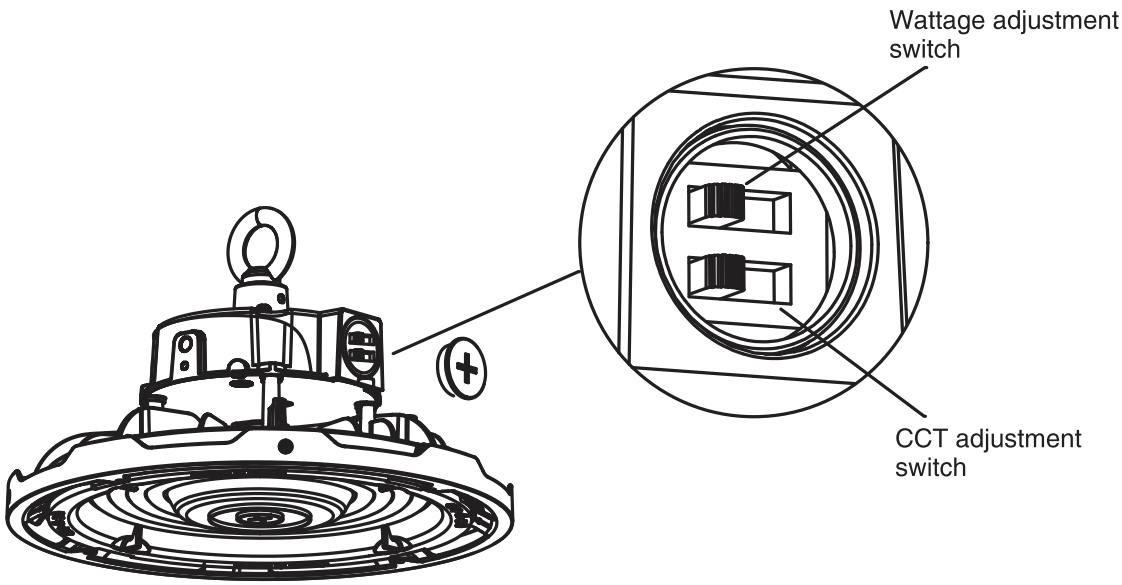

Installation Instruction

Instructions for adjusting Beam Angle

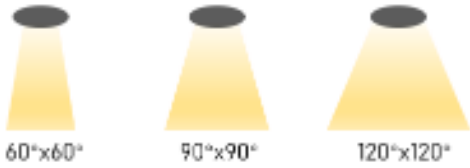

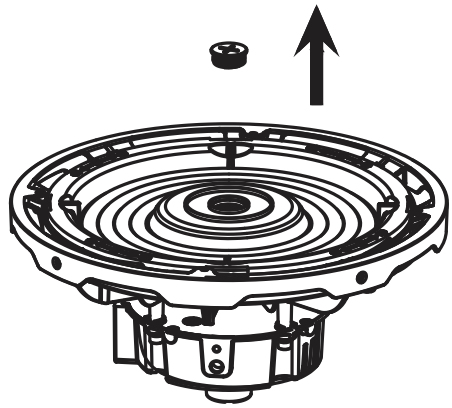

Step 1: Remove the sensor receptacle cover first before adjusting Beam Angle.
Step2: Toggle the picks to rotate the lens for Beam Angle adjustment.

