Installation Instruction

⚠ WARNING

- To reduce the risk of death, personal injury or property damage from fire, electric shock, falling parts, cuts/abrasions, and other hazards read all warnings and instructions included with and on the fixture box and all fixture labels.
- Before installing, servicing, or performing routine maintenance upon this equipment, follow these general precautions.
- Commercial installation, service and maintenance of luminaires should be performed by a qualified licensed electrician.
- For the installation: If you are unsure about the installation or maintenance of the luminaires, consult a qualified licensed electrician and check your local electrical code.
- To prevent wiring damage or abrasion, do not expose wiring to edges of sheet metal or other sharp objects.
- Do not make or alter any open holes in an enclosure of wiring or electrical components during kit installation.

⚠ WARNING

- Turn off electrical power at fuse or circuit breaker box before wiring fixture to the power supply.
- Turn off the power when you perform any maintenance.
- Verify that supply voltage is correct by comparing it with the luminaire label information.
- All wiring connections should be capped with UL approved wire connectors.

⚠ CAUTION

- Avoid direct eye exposure to the light source while it is on.
- Account for small parts and destroy packing material, as these may be hazardous to children.
- Risk of burn. Disconnect power and allow fixture to cool before changing bulb or handing fixture.

NOTICE: Green ground screw provided in proper location.Do not relocate.
NOTICE: Minimum 90℃ supply conductors.
NOTICE: Specifications and dimensions subject to change without notice.
NOTICE: Suitable for Dry or Damp location, Type IC.

General Wiring Diagram

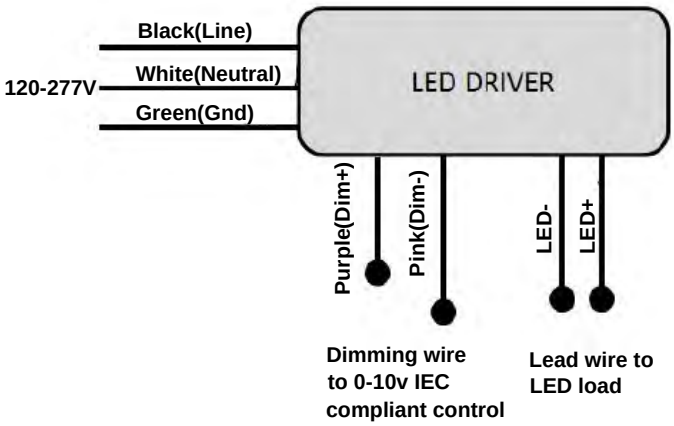

Installation Instruction

INSTRUCTIONS:

Always turn off the power supply from main circuit breaker first!

Figure 1

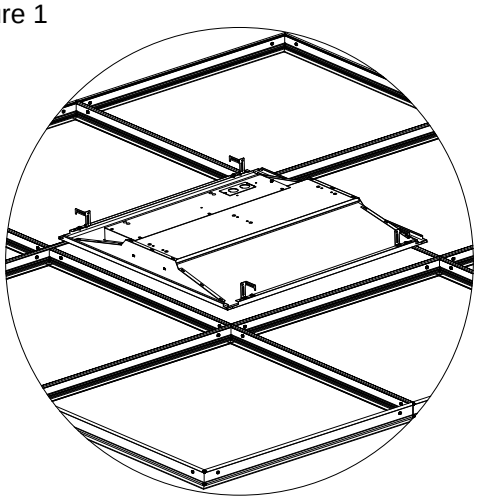

Figure 2

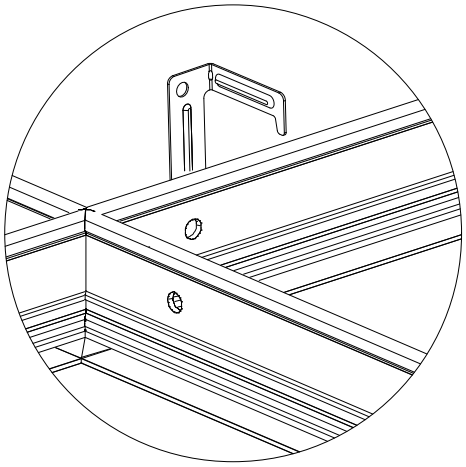

Figure 3

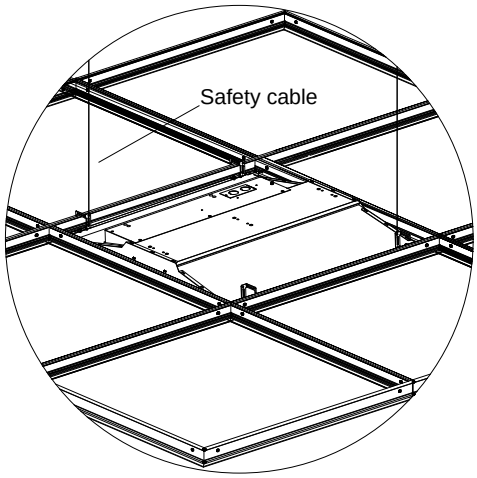

Figure 4

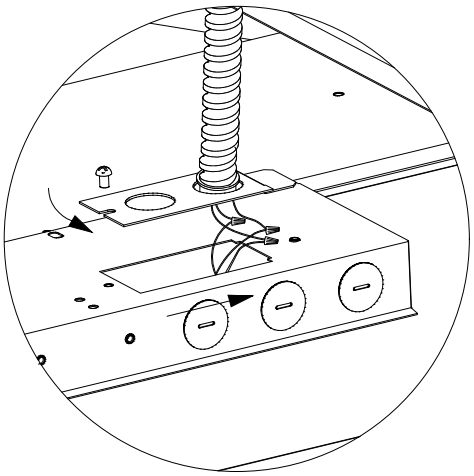

Installation Steps:

1 . Bend (4) grid clip 90° degrees on each corner.(Figure 1)

2 . Install the luminaire into the ceiling T-grid system. Ensure that luminaire sets snuggly in T-grid system. Ensure that all luminaires in an area are oriented in the same direction.(Figure 2)

3.Use a hanger wire to tie off appropriately in accordance with local building codes(screws and hanger wires supplied by others).(Figure 3)

4 .Remove electrical access plate and remove necessary knockouts from access plate. Use appropriate conduit connectors as required by code to attach electrical supply cable to the access plate.

5 .Connect wires as shown in General Wiring Diagram by using appropriate UL-approved wire connectors as required by code. Push all wires back into the splice Box. Attach the wiring access cover plate.(Figure 4)

WARNING: To prevent wiring damage or abrasion, do not expose wiring to edges of sheet metal or other sharp objects.

Installation Instruction

Field-Adjustable Wattage & CCT

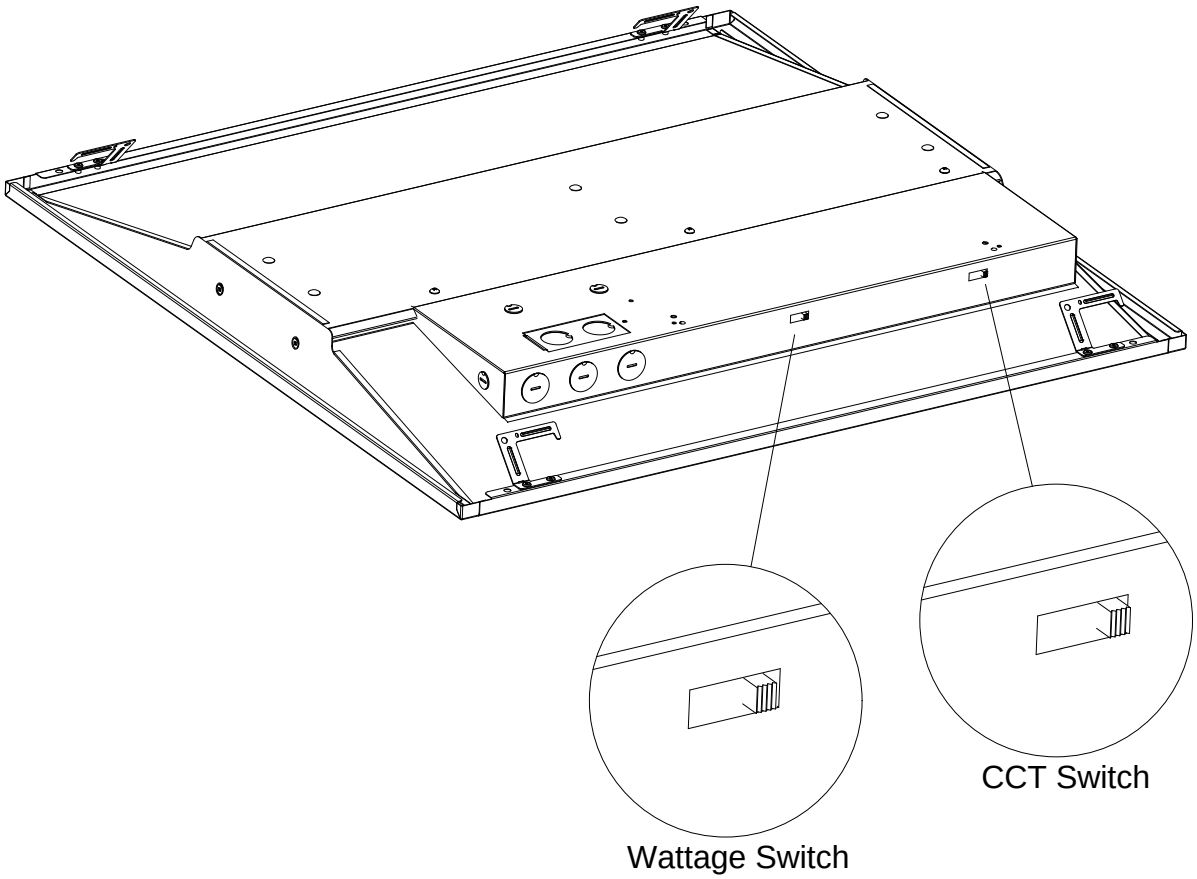

The end users may adjust the color temperature and lumen output respectively by the two DIP switches. CCT switch is accommodated with 5 CCT options (3000K, 3500K, 4000K, 5000K, 6500K), and Power switch is accommodated with 4 power options. The switches can perform the desired color temperature and lumen output combination.

Select a wattage and color temperature by sliding switch left or right respectively to the desired value.

Installation Instruction

Additional Accessories

- DC Sensor

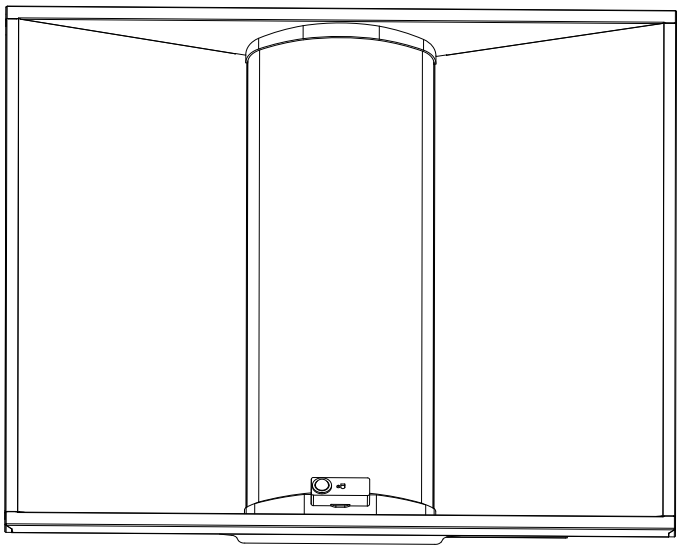

Installation steps：

1.Remove the sensor receptacle plug. (Fig. 1)
2.Plug sensor to the receptacle.(Fig. 2)
3.Rotate the sensor and align its edge to receptacle to ensure that it's installed securely.(Fig. 3 & Fig. 4)

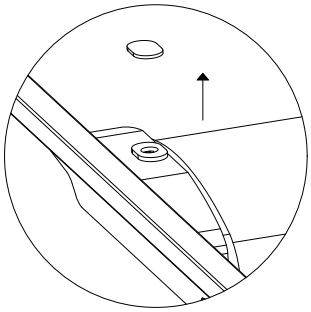

Fig. 1

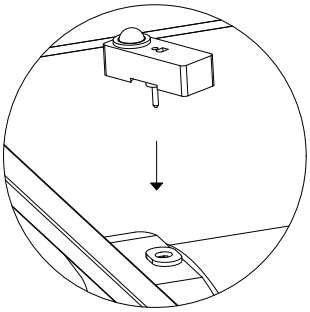

Fig. 2

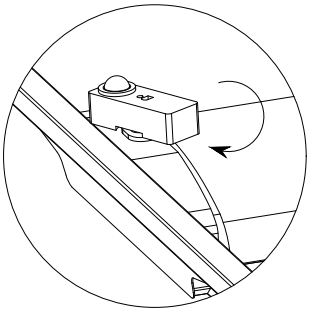

Fig. 3

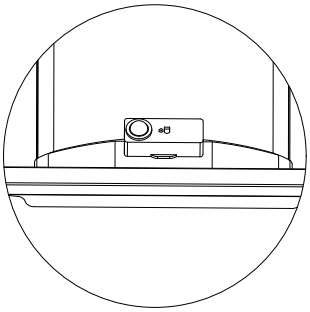

Fig. 4

General Wiring Diagram

