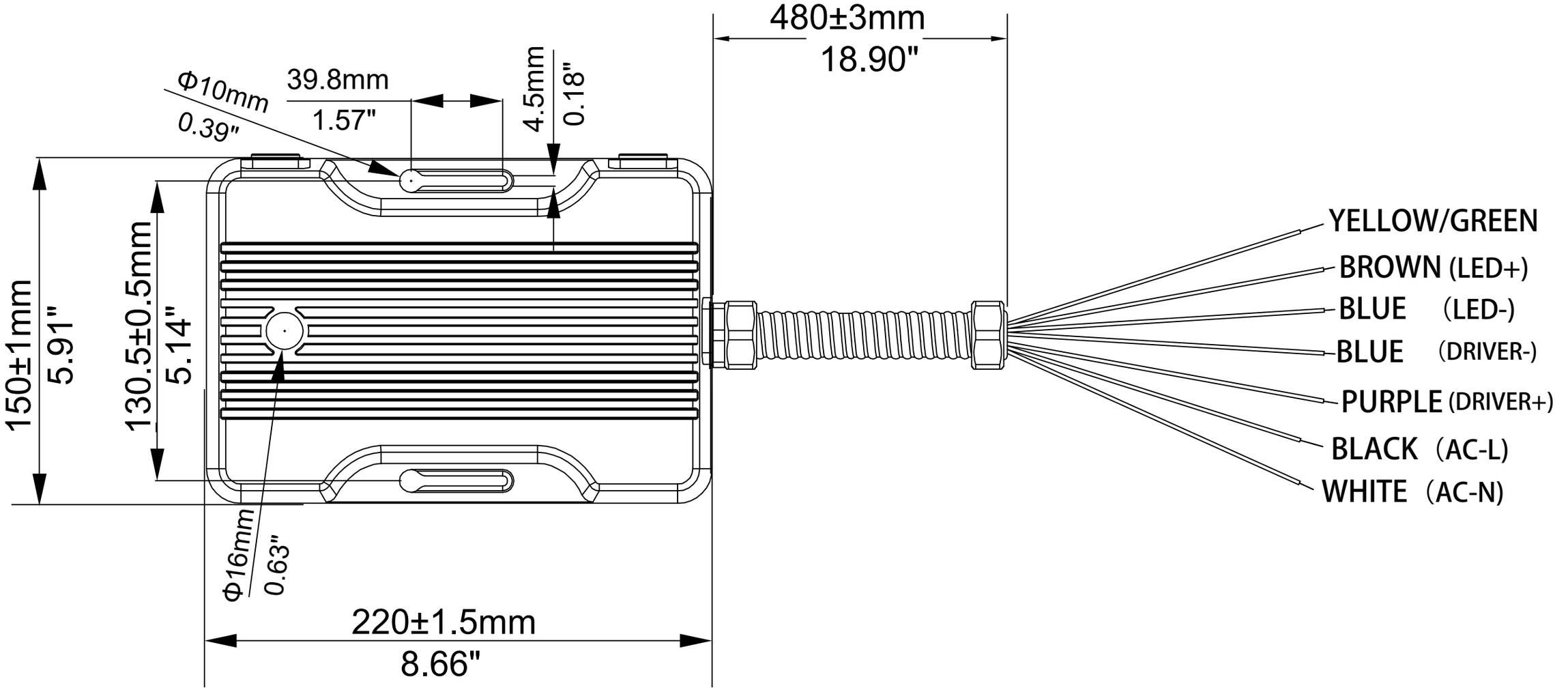
480±3mm
18.90"
Φ10mm
0.39"
39.8mm
1.57"
4.5mm
0.18"
150±1mm
5.91"
130.5±0.5mm
5.14"
Φ16mm
0.63"
220±1.5mm
8.66"
YELLOW/GREEN
BROWN (LED+)
BLUE (LED-)
BLUE (DRIVER-)
PURPLE (DRIVER+)
BLACK (AC-L)
WHITE (AC-N)