Installation Instruction

- Surface Mounting Kit

1. Assemble the entire Surface mount frame. Connect A-type and B-type frames with plastic connectors. Note that the connectors should be properly installed with the stiffener plate closer to the upper surface of the frame.

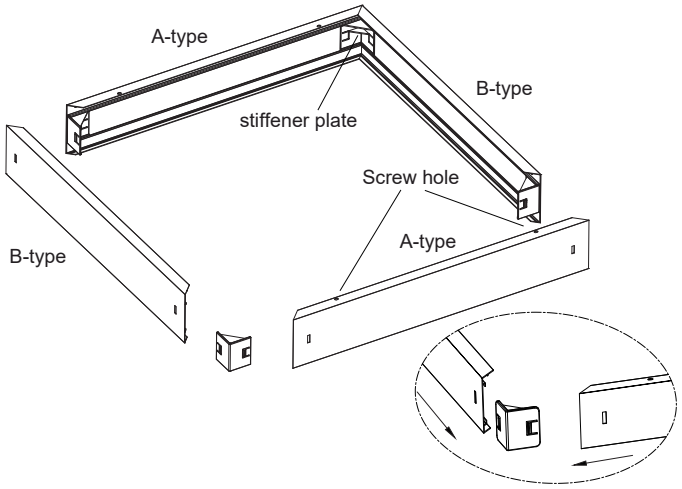

2. Attach the square frame as a positioning ruler to the ceiling, mark the screw holes, and secure the frame to the ceiling.

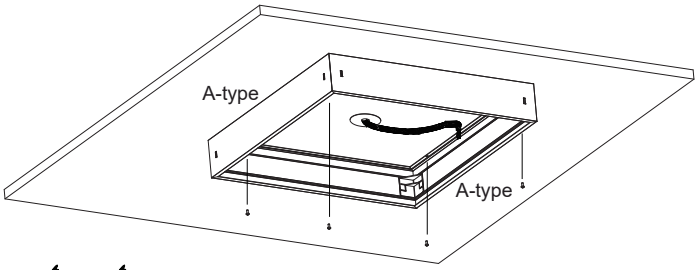



anchors and screws

3. Remove one piece B-type frame by pushing Connector Locking Pin with a screwdriver.

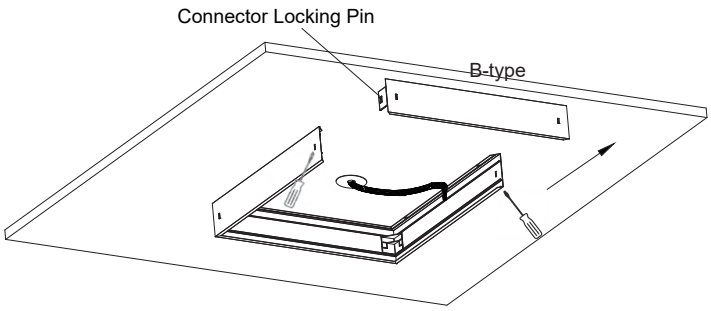

4. Make wiring connection to the main power according to local code and slide the fixture into the frames.

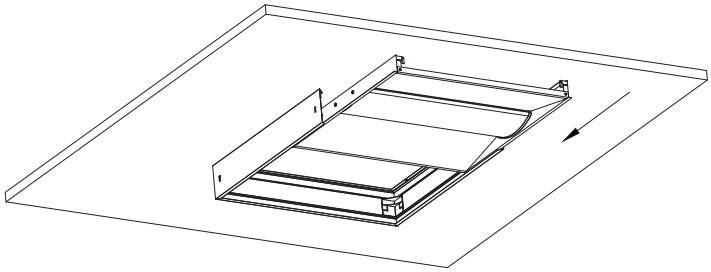

5. Replace the rest B-type frame into the slots, make sure it get locked tightly by connectors.

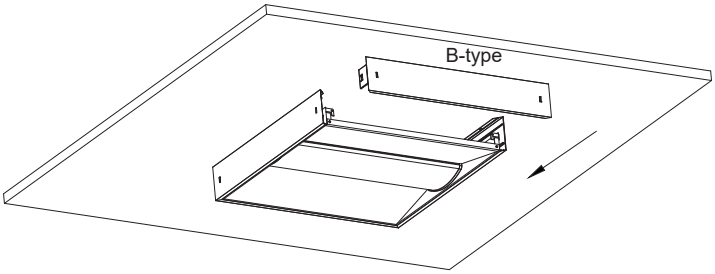

6. Installation is completed. Fixture is ready to power on.

