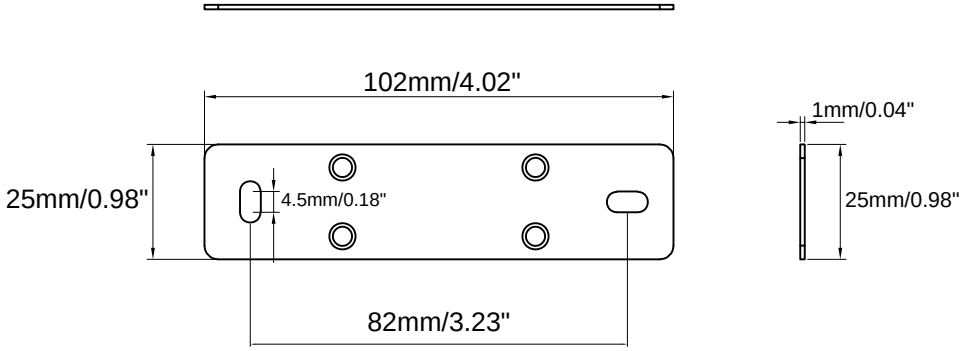
102mm/4.02"
25mm/0.98"
4.5mm/0.18"
82mm/3.23"
1mm/0.04"
25mm/0.98"

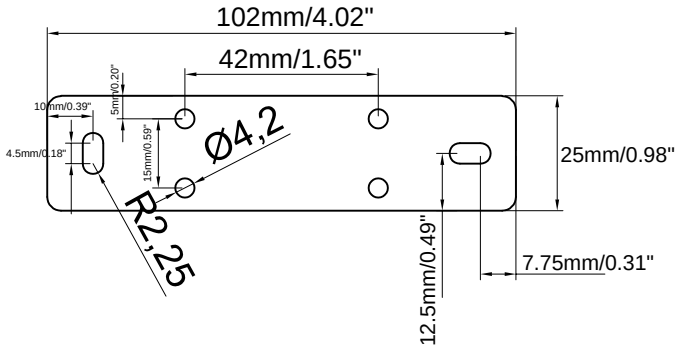
102mm/4.02"
42mm/1.65"
10mm/0.39"
5mm/0.20"
4.5mm/0.18"
15mm/0.59"
Ø4,2
R2,25
25mm/0.98"
12.5mm/0.49"
7.75mm/0.31"