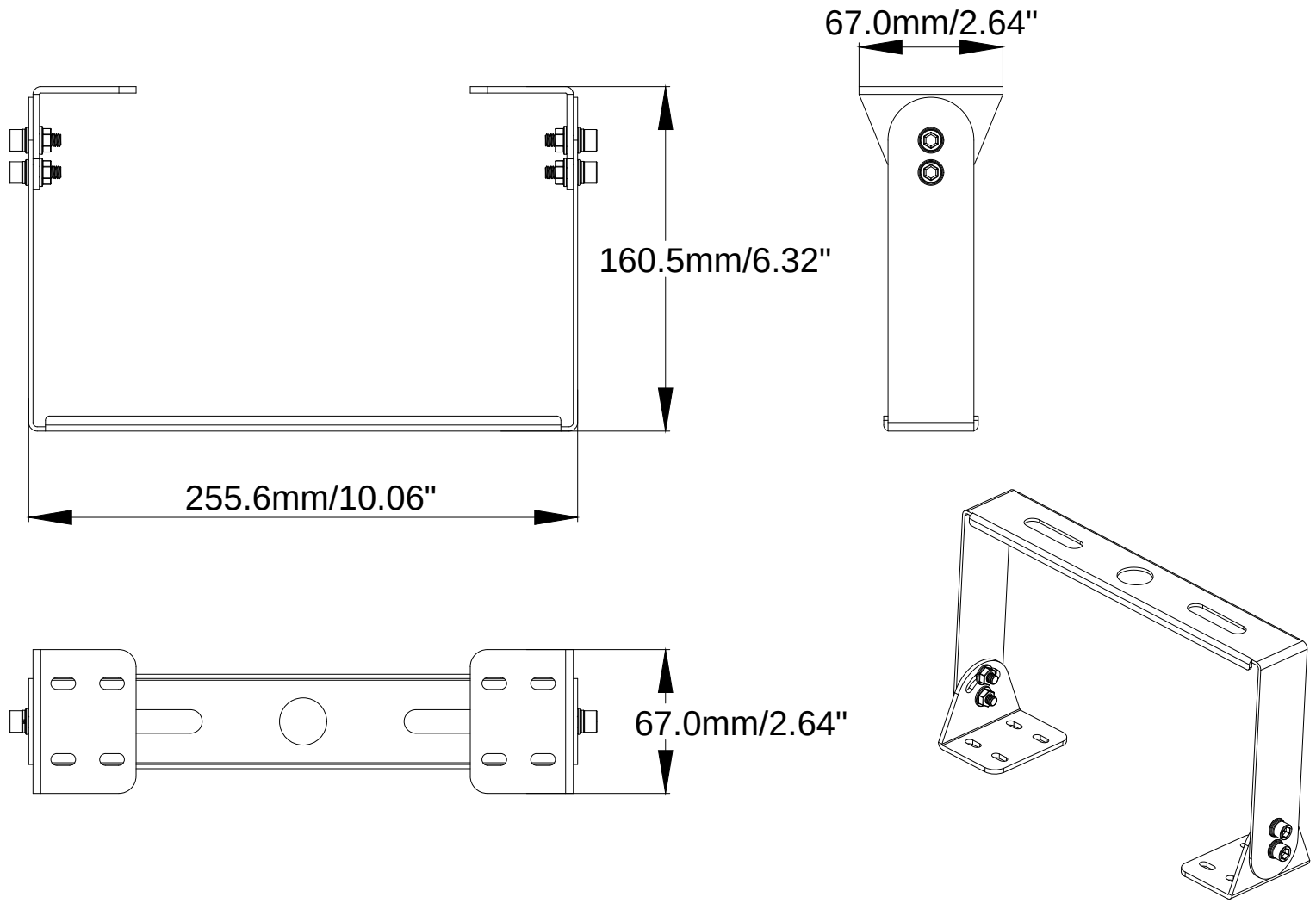
67.0mm/2.64"
160.5mm/6.32"
255.6mm/10.06"
67.0mm/2.64"