# Installation Instruction

## Soft DIY-cut Diffuser for seamless continuous run

### Line Connection

**Notice: Always turn off the power supply from main circuit breaker before installing or maintaining fixture.**

1.Install cross-bar and Non-feed canopy to the ceiling after positioning refer to the dimensions in Fig 7. (Fig.3)
2.Hang one end of Fixture B firmly. Remove the end-caps and diffusers of the 2 fixtures. (Fig. 4)

Fig. 3

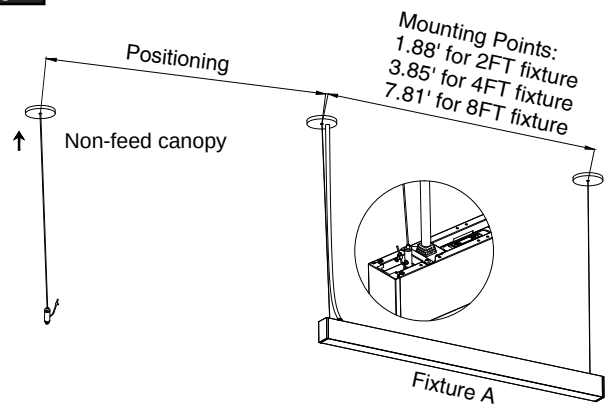


Fig. 4

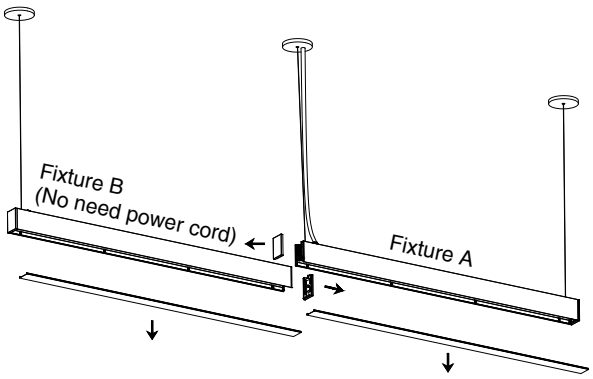


3. Align Fixture B to Fixture A, press to interlock the 2 fixtures in a line. (Fig. 5)
4. Remove the cable bolt hung on the Fixture A. (Fig. 6a & 6b)
5. Install the center hexagon nut to the connection plate.Then, align the connection plate with the positioning holes and secure it with 2 hexagon head bolts. Hang the combination with the cable bolt just removed. (Fig. 6c & 6d)
6. Adjust to desired height. (Fig. 6e)

Fig. 5

**WARNING:** All other fixtures must remain disconnected to the power supply during the assembly process.

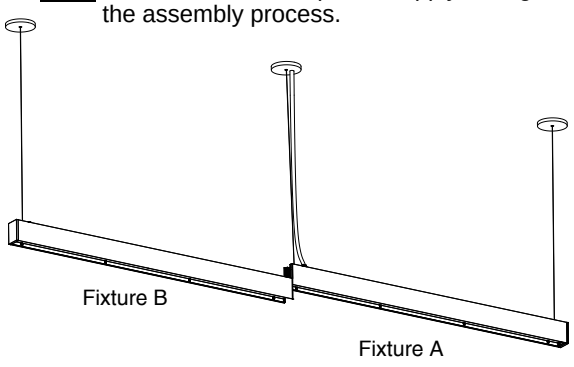


Fig. 6

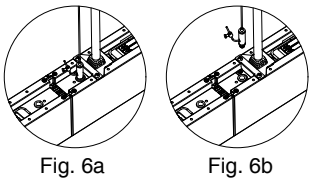

Fig. 6a Fig. 6b

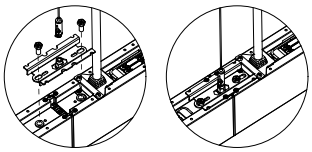

Fig. 6c Fig. 6d

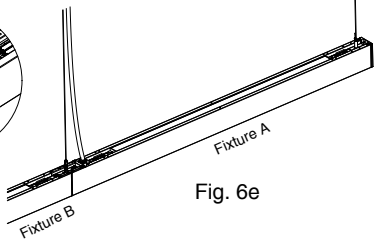


Fig. 6e

7. Repeat above installation steps to make continuous run. Cut the soft lens into a suitable length(refer to Diffuser Length Calculator) , and install it to the channel of the fixture housing.

Fig. 7

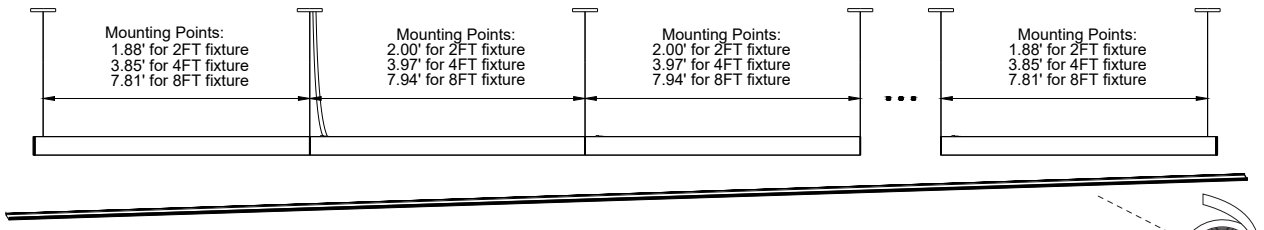


Each Power Feed:
Total connected load is ⩽500W at 120V and ⩽1000W at 277V.

Soft DIY-cut diffuser ( 49.2' length per roll, purchased separately)

# Installation Instruction

**Diffuser Length Calculator for seamless continuous run** (Line connection)

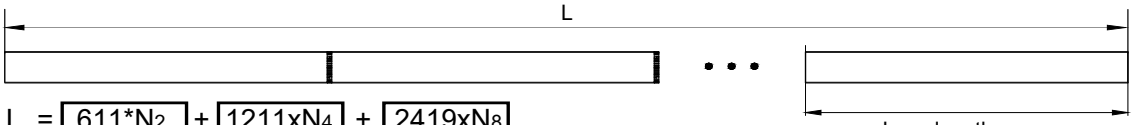


L = 611*$N_2$ + 1211x$N_4$ + 2419x$N_8$

$N_2$ =2ft fixture Qty.
$N_4$ =4ft fixture Qty.
$N_8$ =8ft fixture Qty.

Lens length
2ft: 611mm/24.06"
4ft: 1211mm/47.68"
8ft: 2419mm/95.24"

## Multiple connection methods

'L' connection

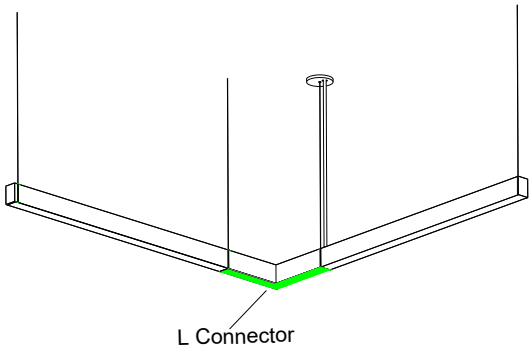


'T' connection

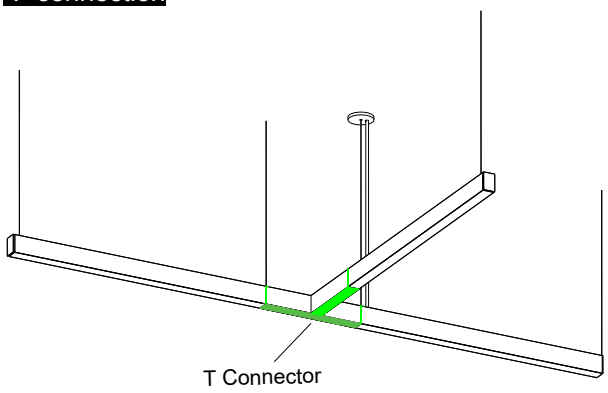


'X' connection

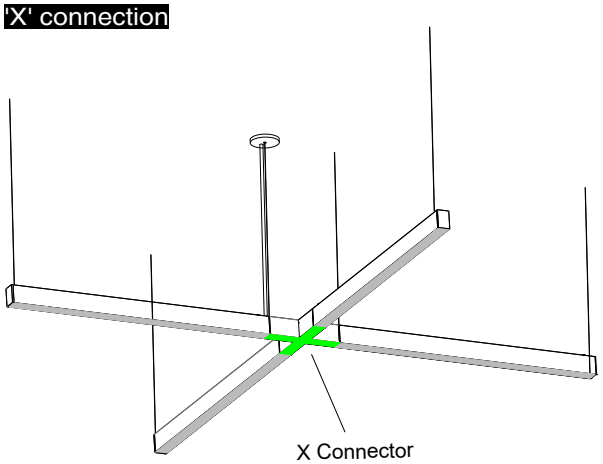


Max. No.* of each Power feed

| Size/Power | AC 120V | AC 277V |
|---|---|---|
| 2FT/20W | 24 Pcs | 48 Pcs |
| 4FT/40W | 12 Pcs | 24 Pcs |
| 8FT/80W | 6 Pcs | 12 Pcs |

Total connected load is ⩽550W at 120V and ⩽1100W at 277V which include connectors.

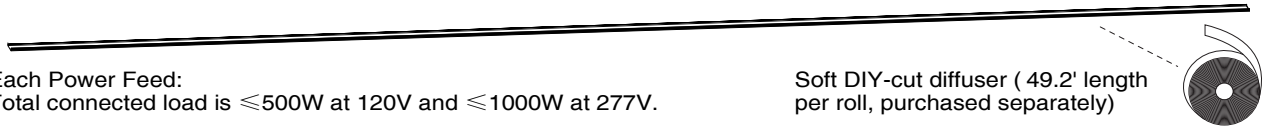

Each Power Feed:
Total connected load is ⩽500W at 120V and ⩽1000W at 277V.

Soft DIY-cut diffuser ( 49.2' length per roll, purchased separately)