Installation Instruction

⚠ WARNING

- To reduce the risk of death, personal injury or property damage from fire, electric shock, falling parts, cuts/abrasions, and other hazards read all warnings and instructions included with and on the fixture box and all fixture labels.
- Before installing, servicing, or performing routine maintenance upon this equipment, follow these general precautions.
- Commercial installation, service and maintenance of luminaires should be performed by a qualified licensed electrician.
- For the installation: If you are unsure about the installation or maintenance of the luminaires, consult a qualified licensed electrician and check your local electrical code.
- To prevent wiring damage or abrasion, do not expose wiring to edges of sheet metal or other sharp objects.
- Do not make or alter any open holes in an enclosure of wiring or electrical components during kit installation.

⚠ WARNING

- Turn off electrical power at fuse or circuit breaker box before wiring fixture to the power supply.
- Turn off the power when you perform any maintenance.
- Verify that supply voltage is correct by comparing it with the luminaire label information.
- All wiring connections should be capped with UL approved wire connectors.

⚠ CAUTION

- Avoid direct eye exposure to the light source while it is on.
- Account for small parts and destroy packing material, as these may be hazardous to children.
- Risk of burn. Disconnect power and allow fixture to cool before changing bulb or handling fixture.

NOTICE: Green ground screw provided in proper location.Do not relocate.
NOTICE: Minimum 90°C supply conductors.
NOTICE: Specifications and dimensions subject to change without notice.
NOTICE: Suitable for Dry or Damp location.

General Wiring Diagram

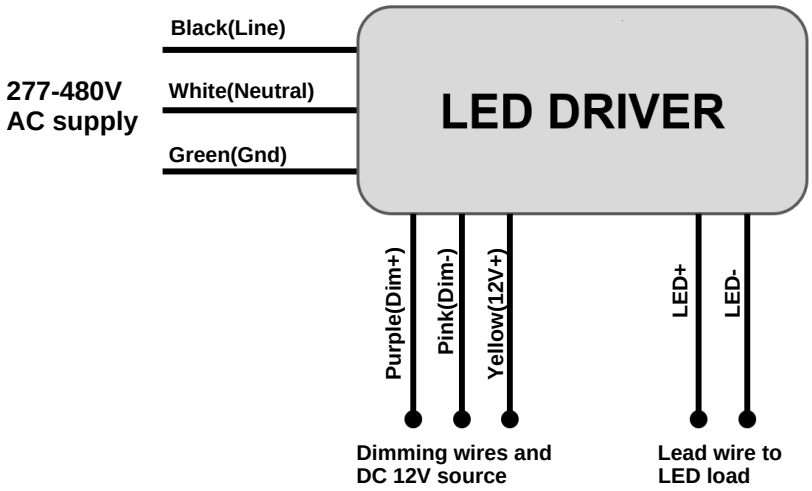

SAVE THESE INSTRUCTIONS

Installation Instruction

A: Chain Suspending mount(Default setting)

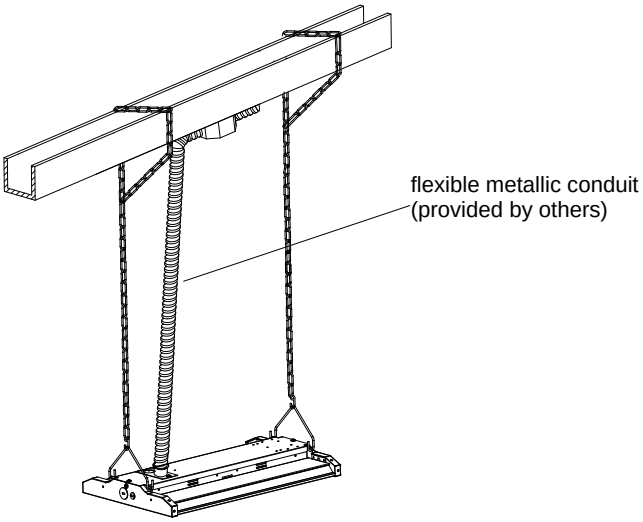

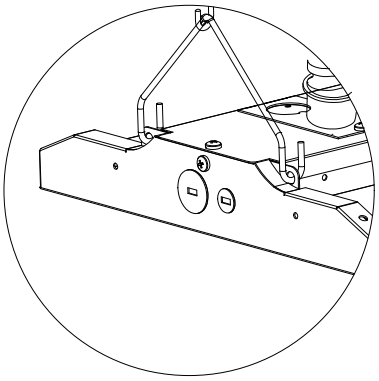

B: Cable Suspending mount

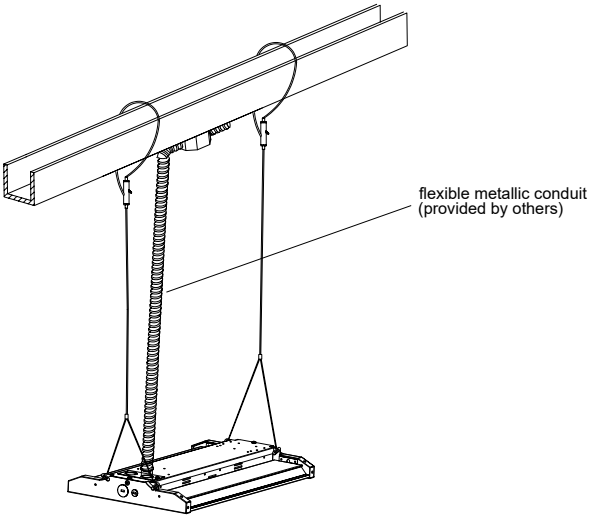

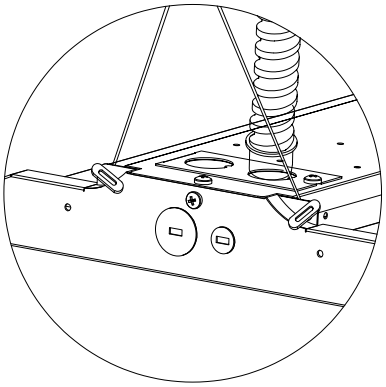

Installation Steps:

Always turn off the power supply from main circuit breaker first!

- Remove the LED fixture from packaging and inspect for any damages. Handle LED fixture with care.
- TO INSTALL WITH CHAIN MOUNT: Install the chain into the provided wire hanger. Secure the other end of the chain to a structure using hardware rated for the load. Install the wire hanger into the slots on the top of the LED luminaire end piece. Make sure the wiring hangers are fully engaged into the slots on the top channel.
- Connect the LED high bay wiring to incoming power lines,refer to the General Wiring Diagram. Use only UL listed wire.
  NOTE: The purple and pink wires inside the driver compartment are 0-10V (low voltage) dimming wires. Connect to low voltage wiring only.
- Clean all residues and fingerprints from the LED luminaire. Double check all hanging hardware before moving onto the next installation.

Installation Instruction

C: Surface Mounting

Always turn off the power supply from main circuit breaker first!

1. Fix the surface mount bracket to celling with adequate screws.

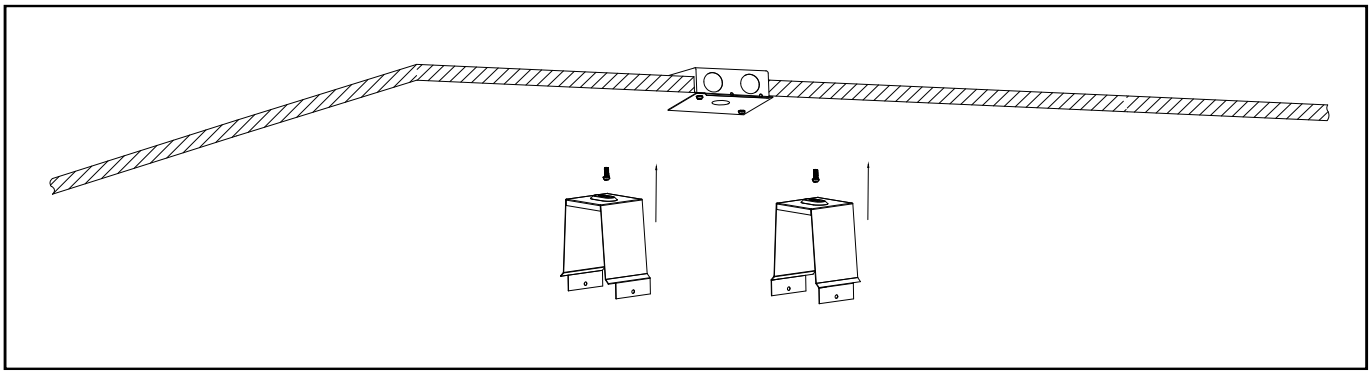

2. Fix the fixture to the bracket with adequate screws.

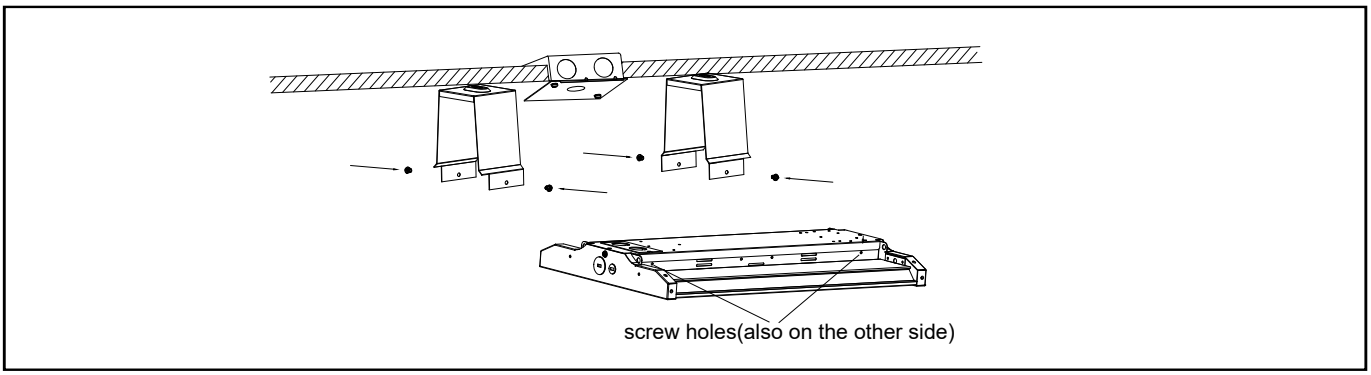

3. Connect the main power wires to fixture wires refer to General Wiring Diagram.All wire connectors or terminal caps must be left inside the junction box or fixture driver box.

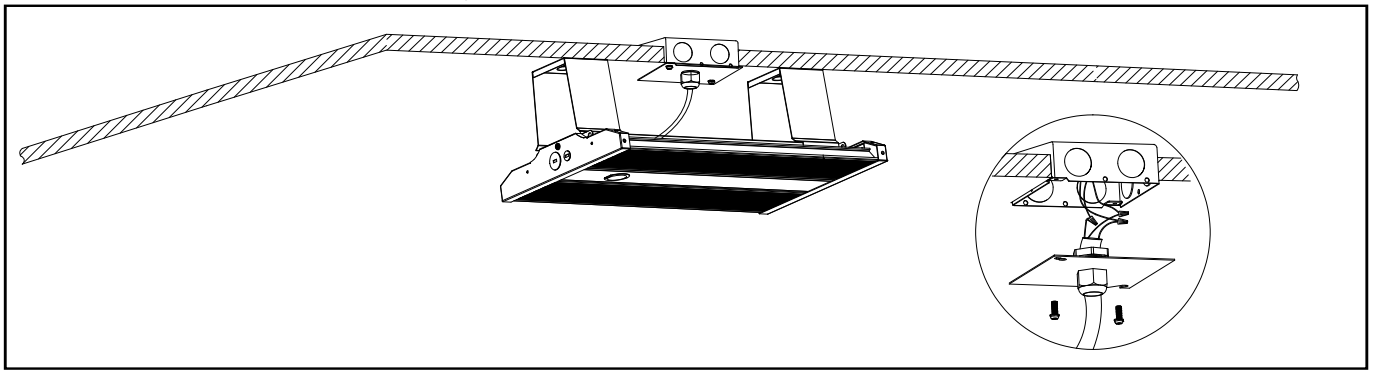

Installation Instruction

D: Pendant mounting

Always turn off the power supply from main circuit breaker first!

1. Attach the pendant box to conduit pipe.

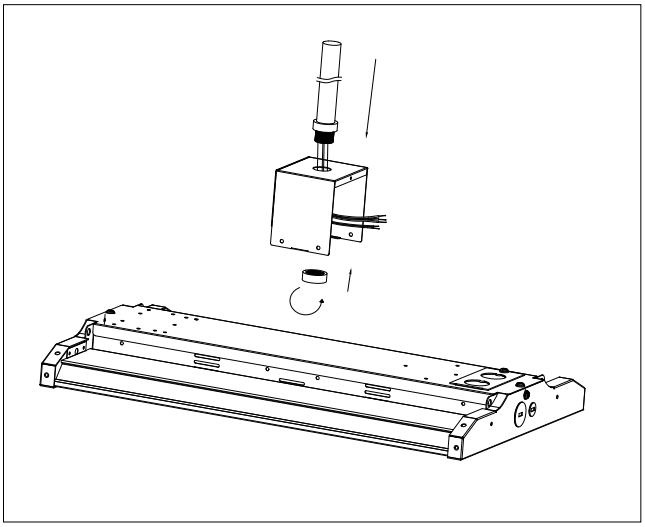

2. Fix the fixture onto the pendant box with screws.

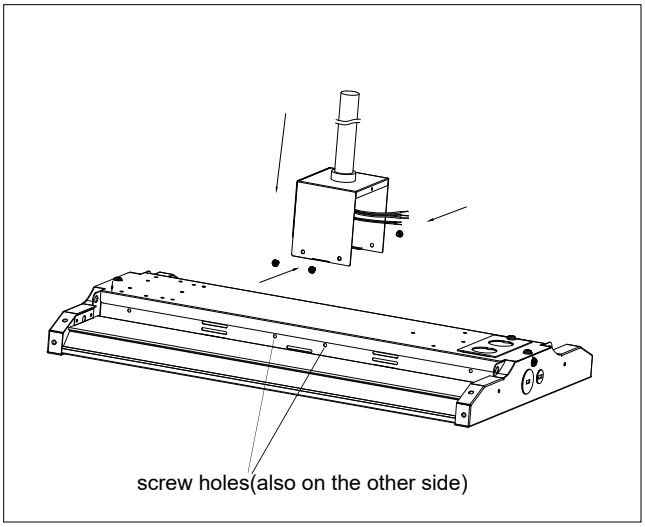

3. Make wiring connections refer to General Wiring Diagram.The bridged wires must be UL listed and wrapped with flexible protective conduit.

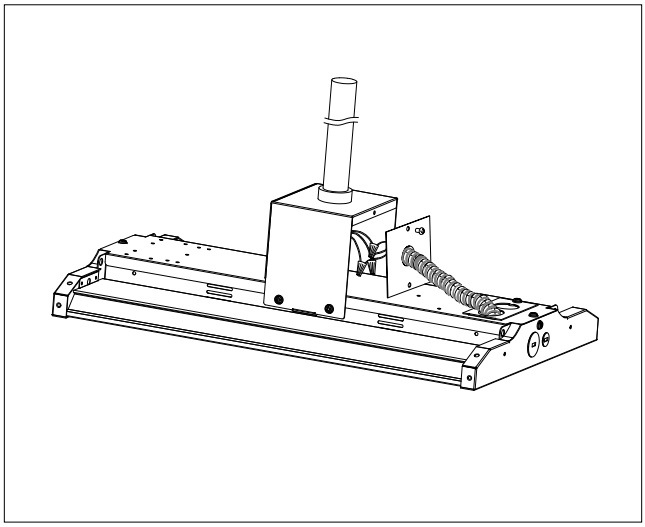

4. Install the two side-covers of the bracket with screws to hide the wires.

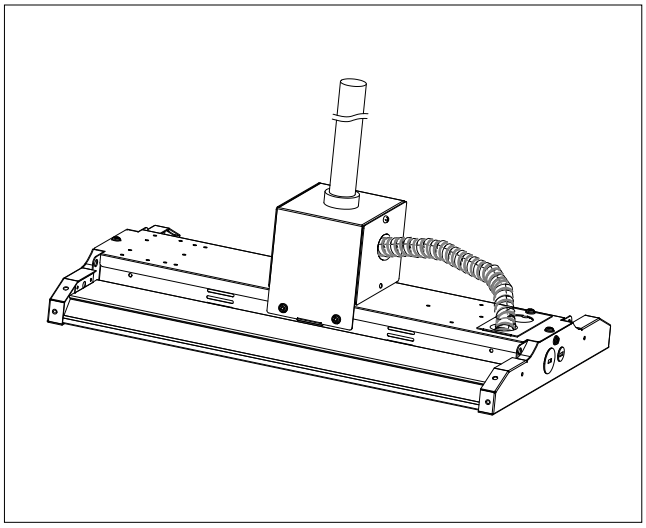

Note：If the outlet board located under the pendant box, do wiring connection directly in the box and no need to use the flexible protective conduit.All wire connectors or terminal caps should be left inside the pendant box.

Installation Instruction

Wire Guards Mounting

1.Prepare the package of lamp body and accessories.

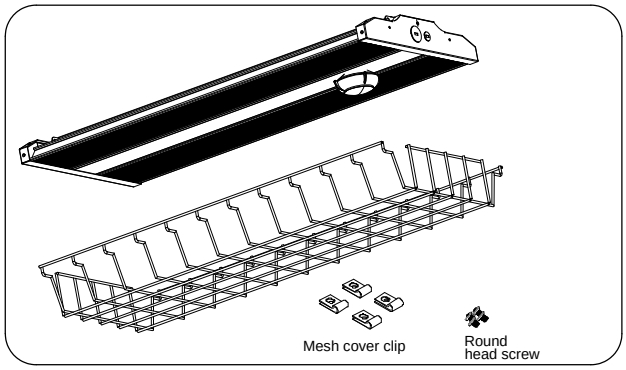

2.Insert the provided chips(4 pcs) onto the wire guard.

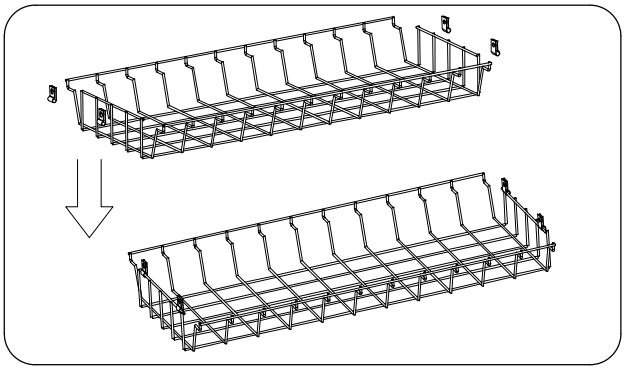

3.Fasten the chips by screws into the prepunched holes of fixture body.

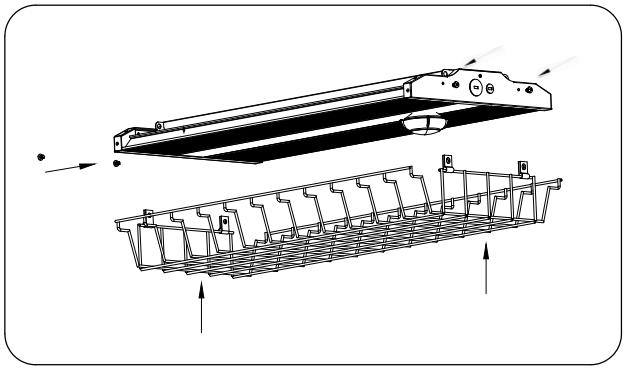

4.The installation is completed.

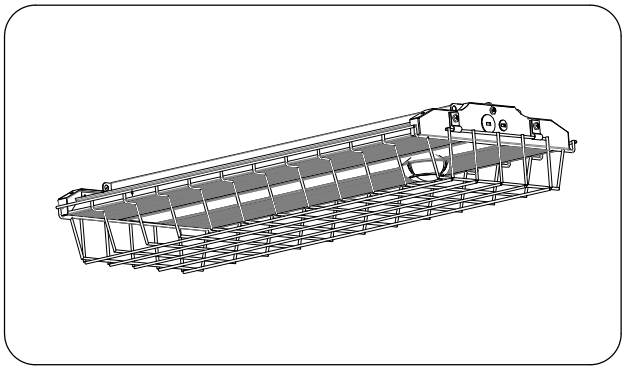

Installation Instruction

E: Replacement of lens

1.Remove the screw of one end-cover.

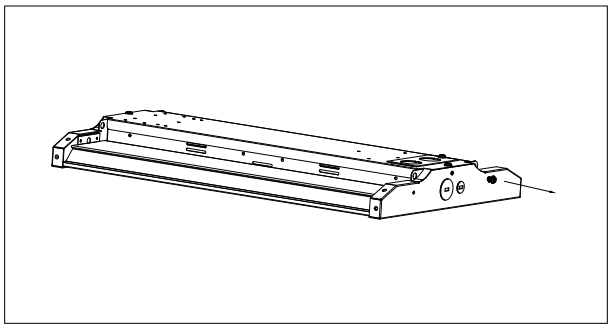

2.Remove the end-cover.

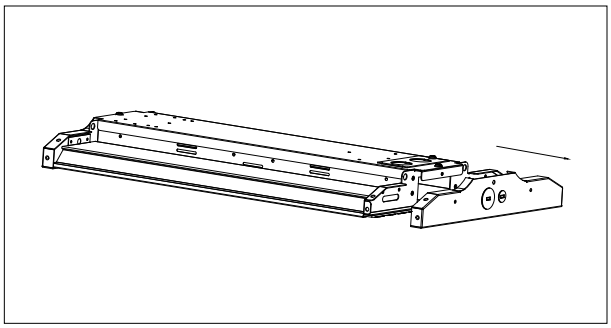

3.Take out the diffuser directly.

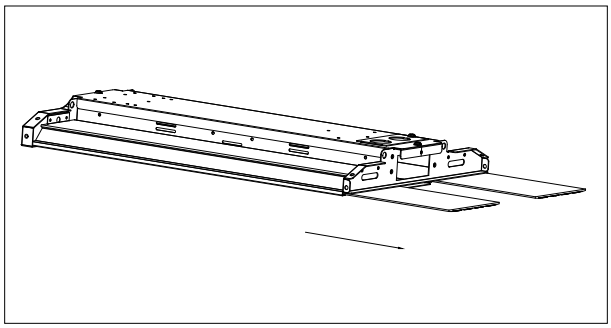

4.Put the desired diffuser into the chanel.

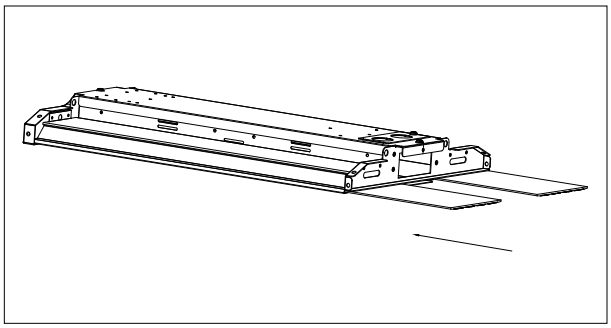

5.Reattach the end-cover to the fixture body and fix it with screw.

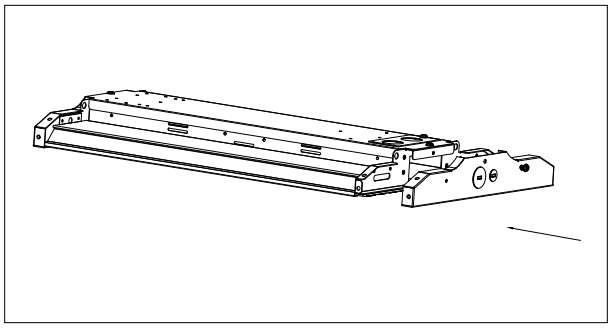

6.The replacement is completed.

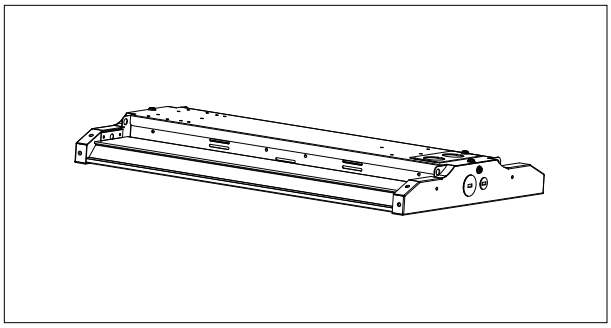

Installation Instruction

Field-Adjustable Wattage & CCT

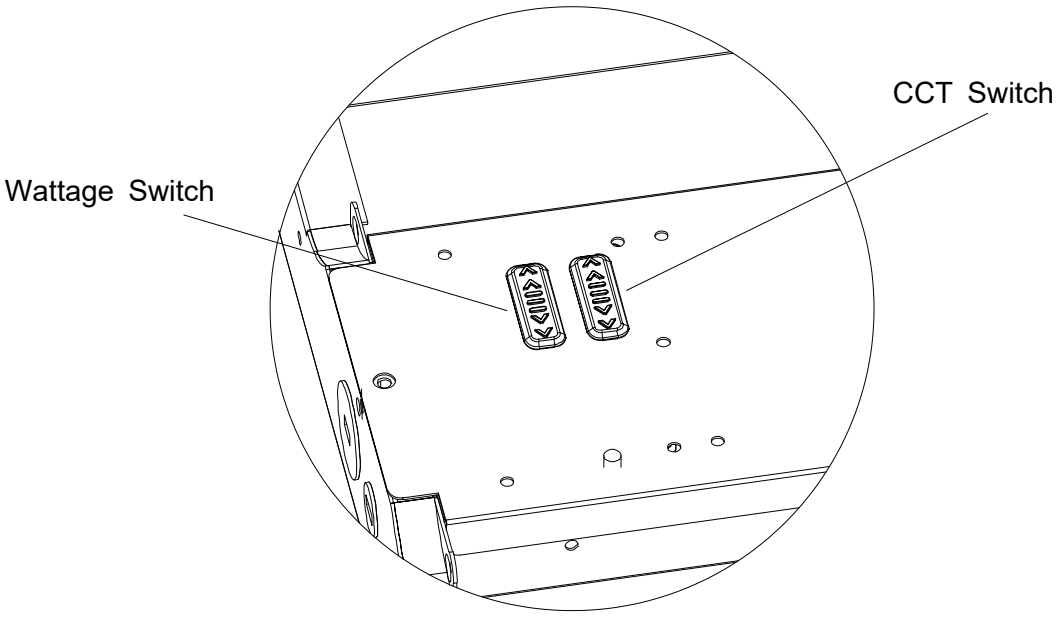

The end users may adjust the color temperature and lumen output respectively by the two DIP switches.The light output DIP switch is accommodated with 3 options (left, middle and right), corresponding to 3 powers respectively, the CCT DIP switch is accommodated with 2 options (left and right), corresponding to 2 color temperatures.

1.DIP switches are located onto the back of the fixture.

2.Select a wattage and color temperature by sliding switch left or right respectively to the desired value.

Installation Instruction

Additional Accessories

- Additional accessory
  DC 12V sensor

1.Take out the fixture carefully.

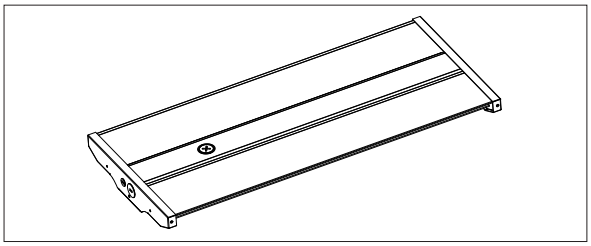

2.Remove receptacle cover.

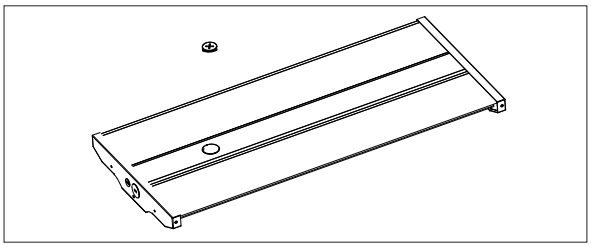

3.Insert the sensor audio plug into the receptacle.

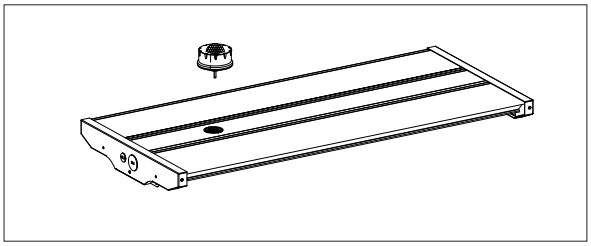

4.Turn the sensor clockwise to make sensor firmly attached.

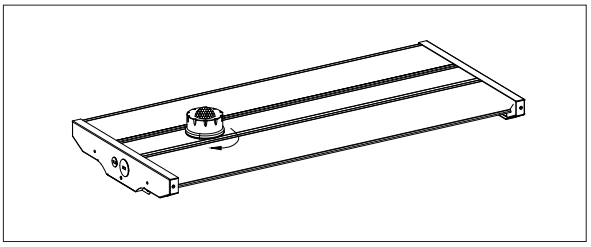

General Wiring Diagram

