Installation Instruction

- Cable Suspended Mounting

Figure 1

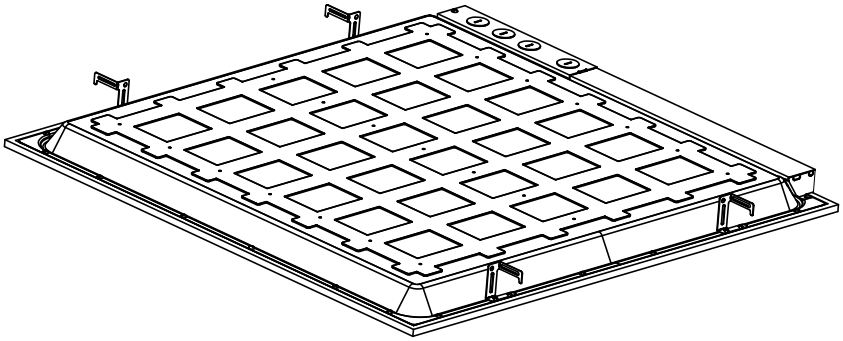

Figure 2

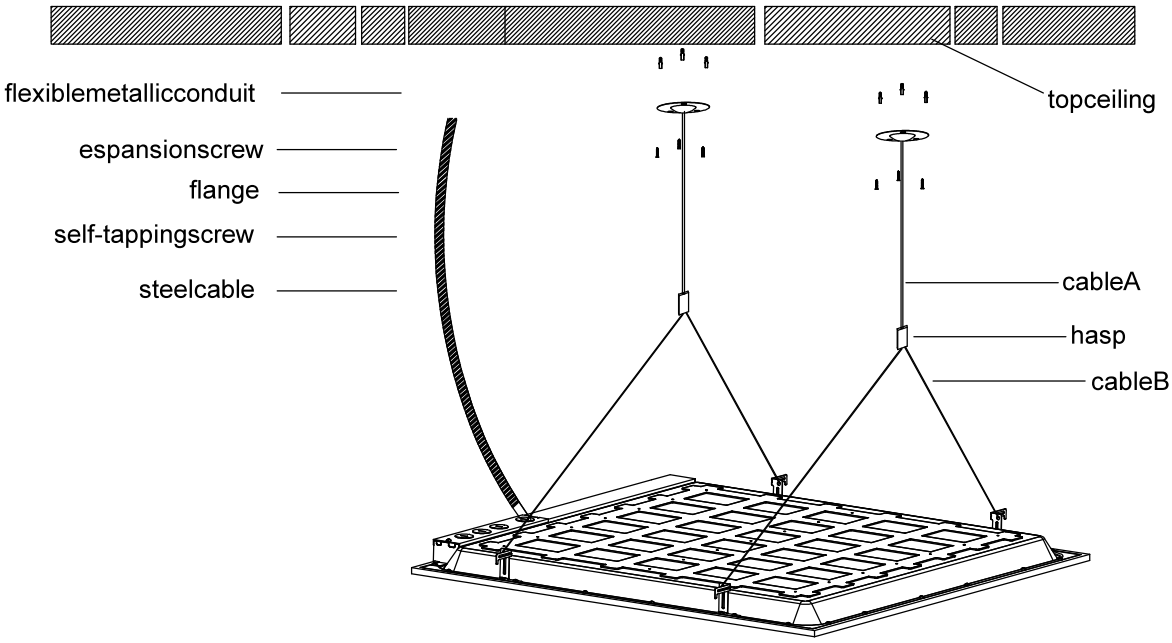

Installation Steps:

Step 1: Replace the exiting earth quake tabs with the provided brackets which are used for fixing adjustable cables.

Step 2: Pull the end cap of cable A through the provided flange and make sure the end cap positioned in the flange. Fix the flanges onto the ceiling by the seif-tapping screws.

Step 3: Insert the end of cable A into the hasp attached on the cable B.then adjust the cable A to be desired height and adjust the cable B to the desired angles.

Step 4: Hook the luminaire up to the hooks attached to the other end of cable B and make a final adjustments.

Step 5: Connect LED driver to AC mains power.

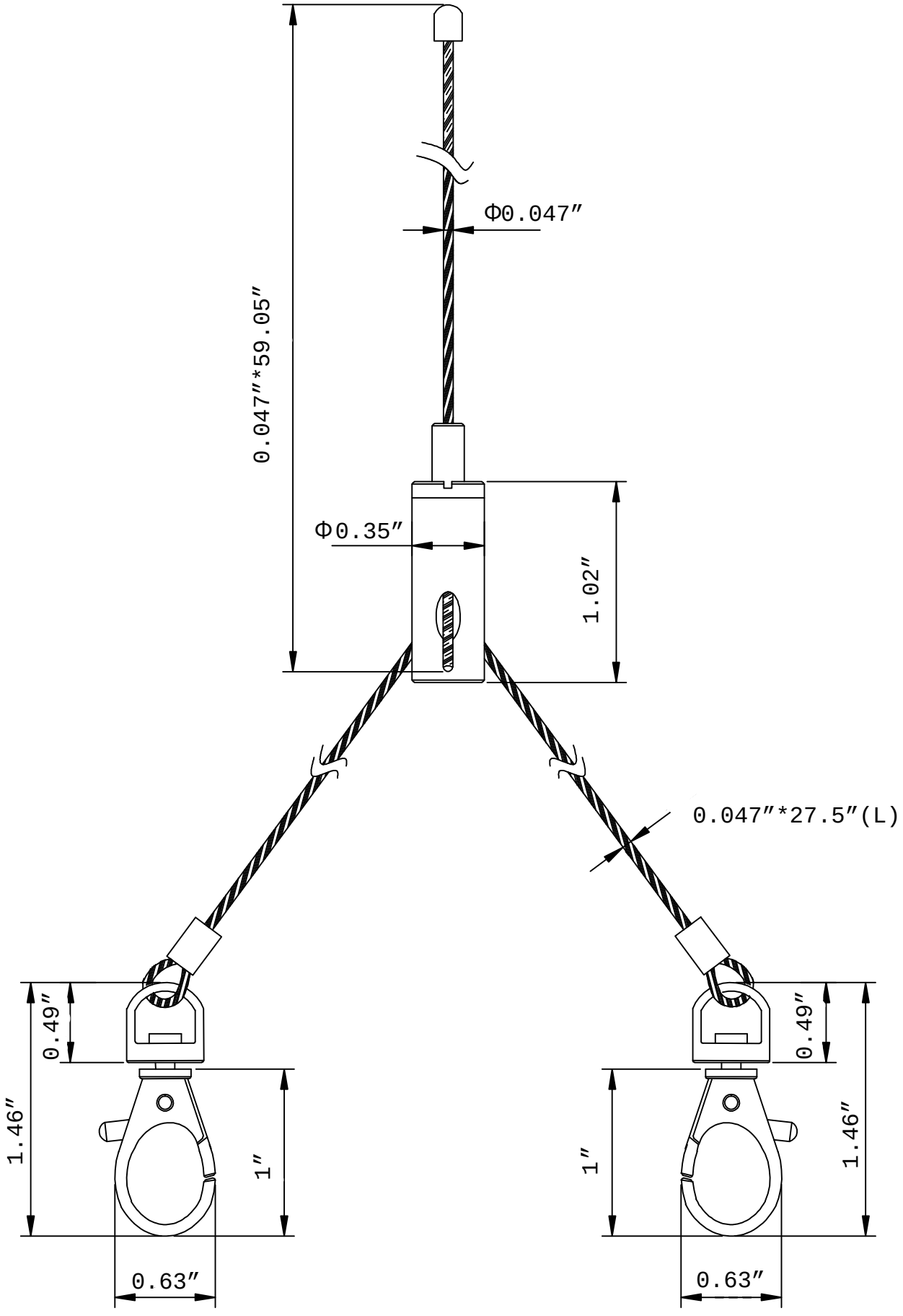
Φ0.047″
0.047″*59.05″
Φ0.35″
1.02″
0.047″*27.5″(L)
0.49″
1.46″
1″
0.63″
0.49″
1″
1.46″
0.63″