Installation Instructions

240/280/320 W SELECTABLE SERIES | AC 120-277 V | MODEL WSD-UFO242832W27-3545K-B-H-A6912

For the WSD LED selectable and angle-adjustable UFO high bay model listed above. Factory settings are 320 W, 4000 K, and 120 degrees. Verify the fixture nameplate and installed options before installation or service.

WARNING - RISK OF FIRE, ELECTRIC SHOCK, OR INJURY

- Installation, service, and maintenance must be performed by a qualified licensed electrician in accordance with applicable codes.
- Disconnect branch-circuit power at the fuse or circuit breaker before wiring, servicing, or changing selector settings. Verify that power is off before touching conductors.
- Verify that branch-circuit voltage is within the marked AC 120-277 V input range. Do not connect this model to a 347 V or 480 V circuit.
- Use UL Listed wire connectors suitable for the conductor size, voltage, and installation environment.
- Protect wiring from sharp metal edges. Do not drill or alter the wiring enclosure except at factory-provided openings.
- Support the fixture with the specified hook, chain, pendant adapter, or yoke bracket. Install the safety cable where required.

IMPORTANT PRODUCT AND WARRANTY NOTICE

- The luminaire nameplate, approved submittal, and accessory-specific instructions control if they differ from this guide.
- Improper installation, unauthorized modification, incompatible accessories, or operation outside marked ratings may void warranty and create hazards.
- The written WSD LED limited warranty governs all warranty claims; this guide does not create or expand warranty coverage.

CAUTION AND NOTICES

- Avoid direct eye exposure while the light is on. Disconnect power and allow the fixture to cool before handling.
- Use supply conductors rated at least 90 °C. Ground the fixture using the green or bare equipment-grounding conductor.
- Suitable for damp or wet locations only when identified on the luminaire label and installed with all seals intact.

General Wiring Diagram

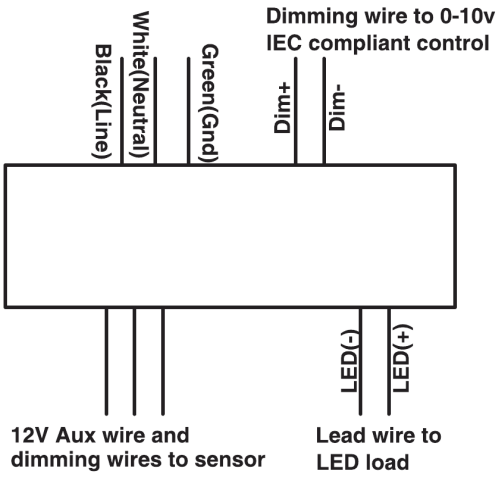

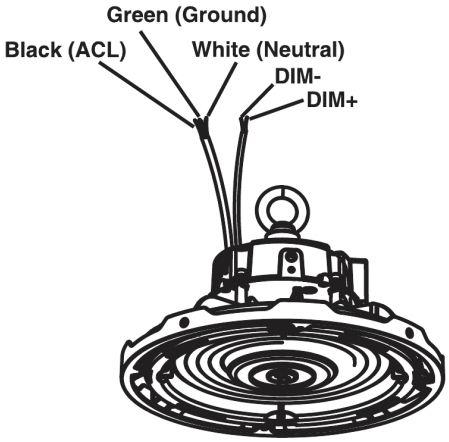

TX HEAD
2010 Com
+1 (469) 857-5693

CA WAREHOUSE
42636 Avenida Alvarado, Temecula, CA 92590
+1 (469) 226-2345

CONTACT
sales@ilighting.com

Sensor and Selector Setup

DE-ENERGIZE BEFORE OPENING

Turn off power at the main breaker and verify the circuit is de-energized before installing a sensor or changing wattage/CCT settings.

Optional Sensor Installation

Bluetooth sensor options: NLC-BT-MW-SR-001 is specifically for the Silvair control system, while NLC-BT-MW-GE-001 is specifically for the GEBC control system. Do not substitute these two models.

Other listed options for this series include NLC-MW-PT-002 and NLC-PIR-PT-001. Confirm the receptacle type, control platform, and compatibility before ordering; sensor models are not interchangeable.

- Remove the factory knockout or protective plug using a screwdriver without damaging the receptacle.
- Insert or thread the approved sensor into the receptacle and tighten it securely.
- Program and test the sensor with its compatible remote, app, or commissioning tool, as applicable.

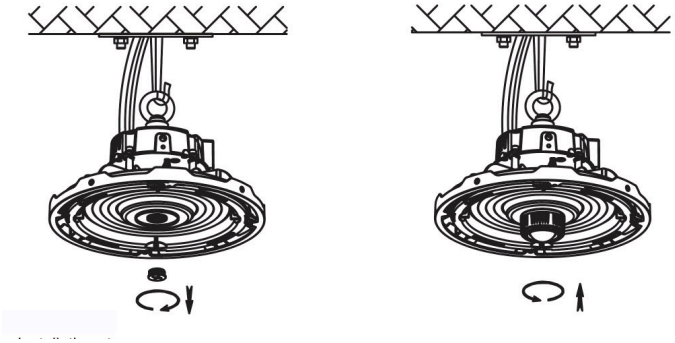

Silvair Commissioning

Developer: Silvair, Inc.

OPEN APPLE APP STORE

GEBC

Developer: HOMEWELL, INC.

OPEN APPLE APP STORE

Wattage and CCT Selection

- Remove the selector cover and set both switches to labeled detent positions only.
- Available wattage settings are 240 W, 280 W, and 320 W. CCT settings are 3500 K, 4000 K, and 5000 K.
- Verify the selected values against the fixture label, reinstall the cover, and restore power. Never move selector switches while the fixture is energized.

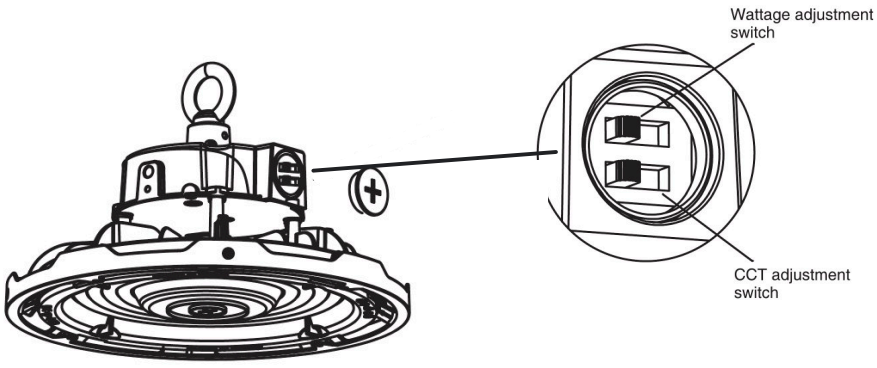

Mounting Methods

BEFORE INSTALLATION

Disconnect power. Confirm that the supporting structure is rated for the fixture weight and dynamic loads. Attach the safety cable to an independent structural point.

A. Hook or Chain

- Secure the supplied eyebolt, then suspend the fixture from a listed hook or chain and lock all connectors.
- Attach the safety cable and complete wiring in accordance with Page 1 and local code.

B. Rigid Pendant

- Use the approved adapter for the fixture and voltage class. The source design uses a 3/4 in. NPT connection.
- Thread onto the rigid pendant, tighten locking hardware, attach the safety cable, and complete wiring.


Figure 1


Figure 2

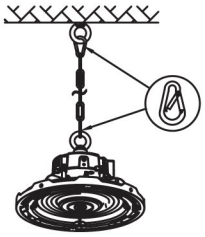
Figure 3


Figure 4



Figure 5


Figure 6

C. Yoke-Bracket Mounting

- Use the yoke as a template and install structural fasteners appropriate for the mounting surface.
- Attach both side brackets, set the aiming angle, tighten both pivot fasteners, attach the safety cable, and complete wiring.

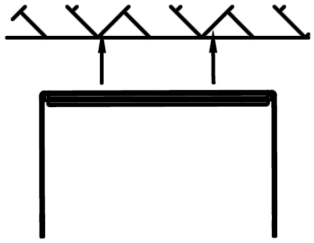
Figure 7

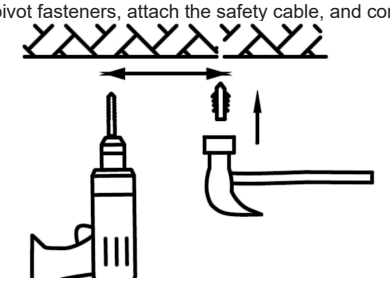
Figure 8

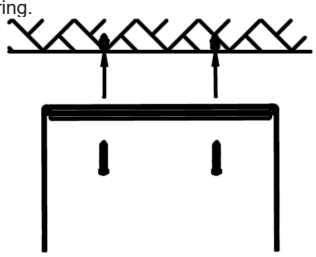
Figure 9

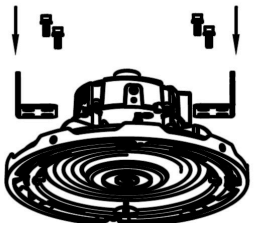
Figure 10

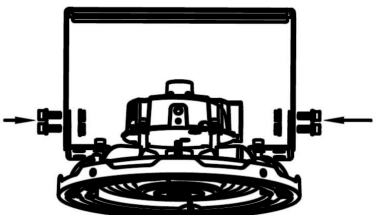
Figure 11


Figure 12

Mounting Orientations

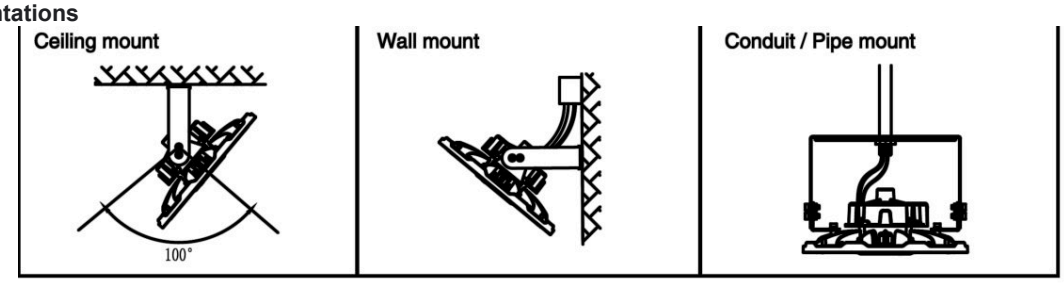

Accessories and Beam-Angle Adjustment

ACCESSORY COMPATIBILITY

Use only WSD-approved accessories made for the 240-320 W housing. Reflectors, covers, wire guards, emergency equipment, and mounting hardware are sold separately.

- Align the reflector or wire guard with the factory mounting points. Install all supplied fasteners and tighten evenly.
- For the polycarbonate cover, align the cover and reflector edges, install the hose clamp, and secure the assembly with the supplied double-hook spring.

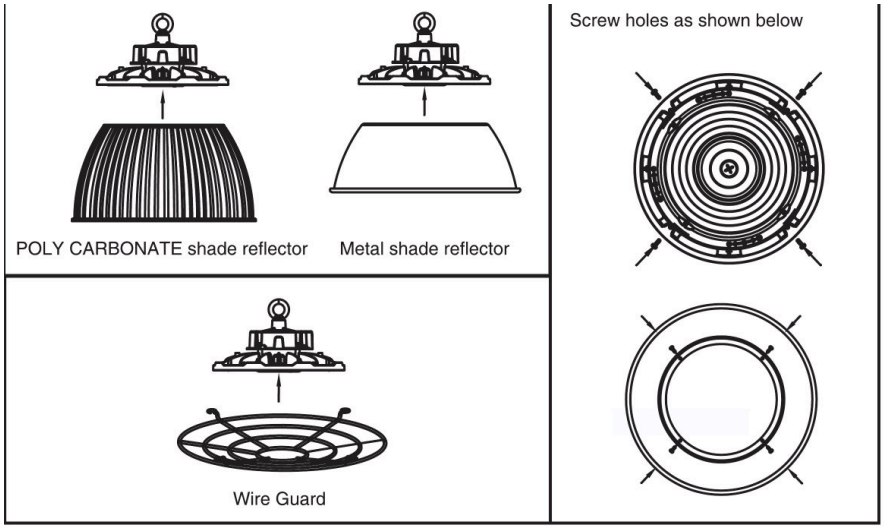



Tool-Free Beam-Angle Adjustment

- De-energize the luminaire and allow it to cool. Remove the sensor-receptacle cover before adjusting the lens.
- Move both lens picks evenly to the same marked position: 60 degrees, 90 degrees, or 120 degrees. Do not force the lens between detents.
- Reinstall the receptacle cover and verify that all seals are fully seated before restoring power.



60° × 60° **90° × 90°** **120° × 120°**

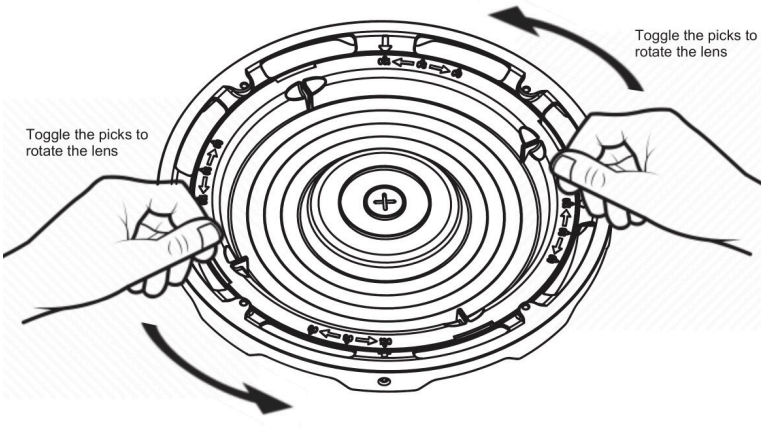

Optional Emergency Backup

TECHNICAL COMPATIBILITY MUST BE CONFIRMED

The product data sheet identifies WSD-EMUFO40W347-R as the 40 W emergency option for low-voltage AC 120-277 V luminaires. Confirm the exact fixture, driver, sensor, and emergency-package combination before installation.

Use only a factory-configured or WSD-approved emergency package. Follow the emergency-driver instructions supplied with the approved kit; those wiring instructions control if they differ from this overview.

Mechanical Arrangement

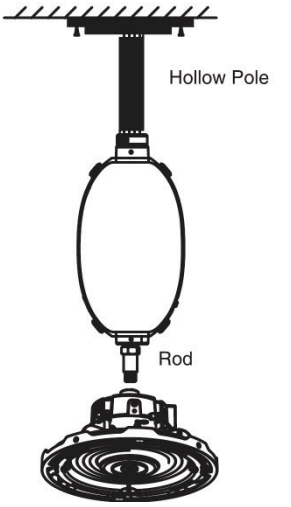

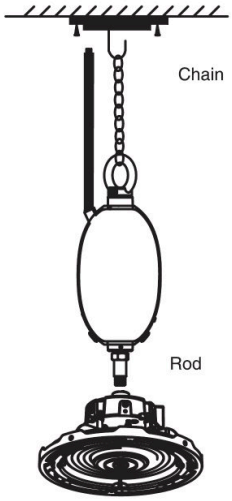

Without sensor

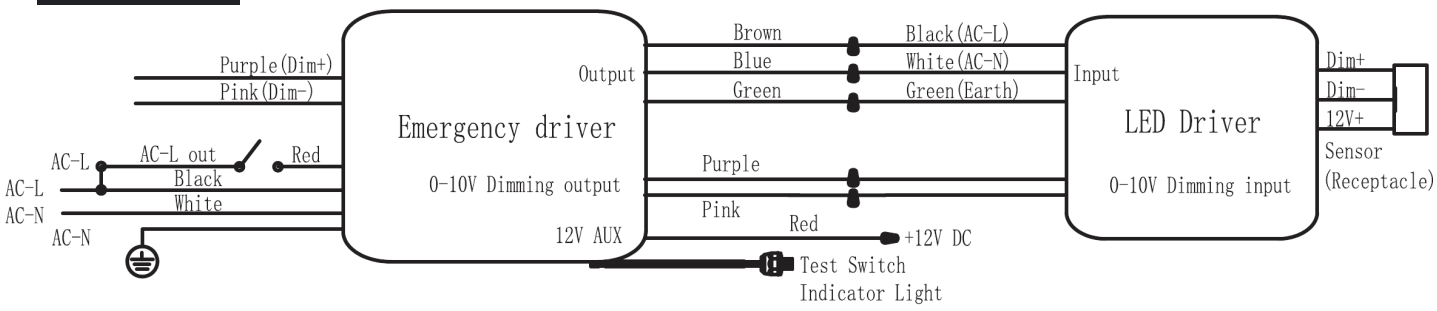

With sensor

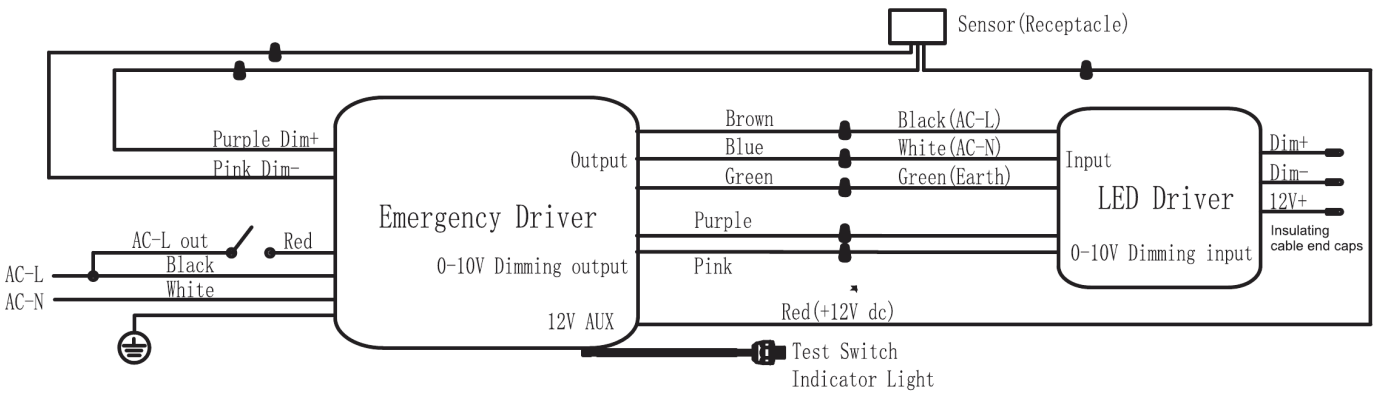

WIRING DIAGRAM APPLIES ONLY TO A WSD-APPROVED 120-277 V EMERGENCY PACKAGE. FOLLOW THE EMERGENCY-DRIVER INSTRUCTIONS IF THEY DIFFER.