LED FLOOD LIGHT

Installation Guide

⚠ WARNING

PLEASE READ ALL INSTRUCTIONS BEFORE ATTEMPTING INSTALLATION

— To prevent personal injury or product damage only licensed electricians should install.
— To avoid electric shock or component damage disconnect power before attempting installation or servicing.
— This product must be installed in accordance with the national electric code (NEC) and all applicable federal, state and local electric codes and safety standards.
— Disconnect product and allow cooling prior to servicing.
— Any alteration or modification of this product is expressly forbidden as it may cause serious personal injury, death, property damage and/or product malfunction.
— To prevent product malfunction and/or electrical shock this product must be properly grounded.
— This luminaire is designed to operate in ambient temperatures ranging from -30° c to 45° c and to be horizontally mounted with the LEDs facing down.
— Flood Light only.

1. Unpacking

Thoroughly inspect the fixture for freight damage. Freight damage should be reported to the delivery carrier.

2. Installation

1).Connect AC power wire, then twist the light into fixed 1/2 pipe.

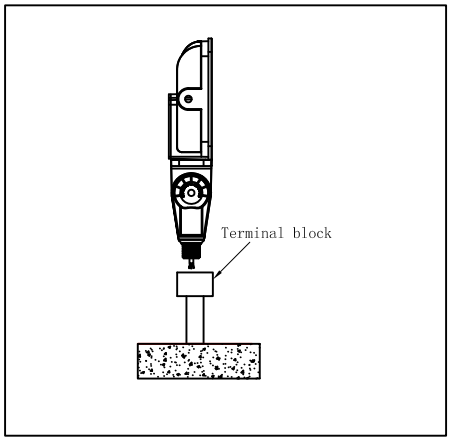

2).After the angle of light set, fasten the screw in the middle of adjustable arm. Make sure all connection is fine, then installation is done.r

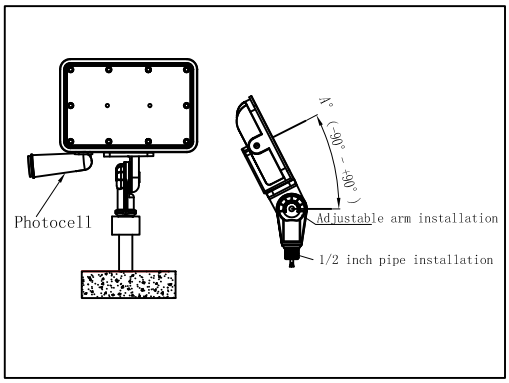

3. Trunnion Mounted

1).Drill two 8mm screw hole on the wall or ground, please make sure the position of the screw hole match with the following drawing.

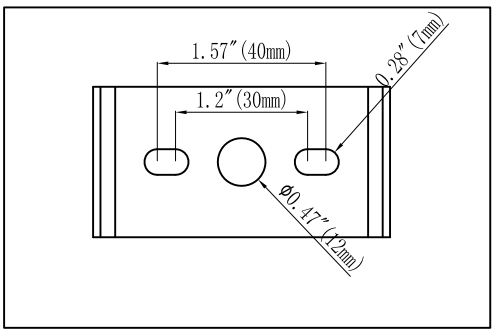

2).Fixed the bracket on the screw hole, and adjust the angle of light according to your application, fasten the screw in the middle of adjustable arm. Make sure all connection is fine, then installation is done

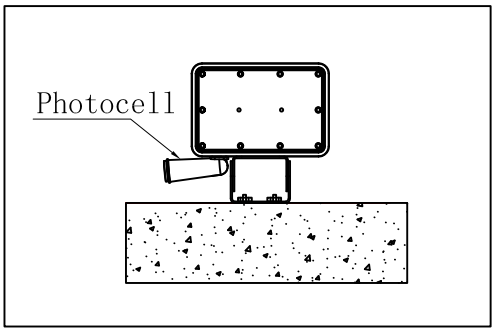

4. Checking

1). Does all the wires connect in a correct way as the pictures show below?
2). Is the ground lead installed appropriately?
3). make sure the photocell function well.