Installation Instruction

⚠ WARNING

- To reduce the risk of death, personal injury or property damage from fire, electric shock, falling parts, cuts/abrasions, and other hazards read all warnings and instructions included with and on the fixture box and all fixture labels.
- Before installing, servicing, or performing routine maintenance upon this equipment, follow these general precautions.
- Commercial installation, service and maintenance of luminaires should be performed by a qualified licensed electrician.
- For the installation: If you are unsure about the installation or maintenance of the luminaires, consult a qualified licensed electrician and check your local electrical code.
- To prevent wiring damage or abrasion, do not expose wiring to edges of sheet metal or other sharp objects.
- Do not make or alter any open holes in an enclosure of wiring or electrical components during kit installation.

⚠ WARNING

- Turn off electrical power at fuse or circuit breaker box before wiring fixture to the power supply.
- Turn off the power when you perform any maintenance.
- Verify that supply voltage is correct by comparing it with the luminaire label information.
- All wiring connections should be capped with UL approved wire connectors.

⚠ CAUTION

- Avoid direct eye exposure to the light source while it is on.
- Account for small parts and destroy packing material, as these may be hazardous to children.
- Risk of burn. Disconnect power and allow fixture to cool before changing bulb or handing fixture.

NOTICE: Green ground screw provided in proper location.Do not relocate.
NOTICE: Minimum 90° supply conductors.
NOTICE: Specifications and dimensions subject to change without notice.
NOTICE: Suitable for Dry or Damp location.

General Wiring Diagram

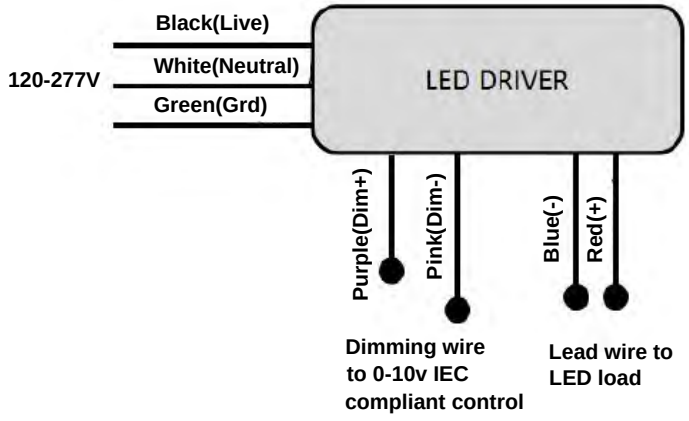

Installation Instruction

D: Pendant mounting

Always turn off the power supply from main circuit breaker first!

1. Attach the pendant box to conduit pipe.

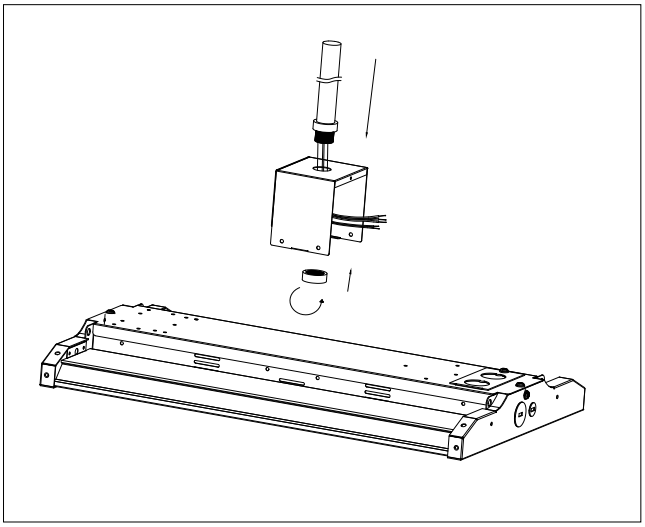

2. Fix the fixture onto the pendant box with screws.

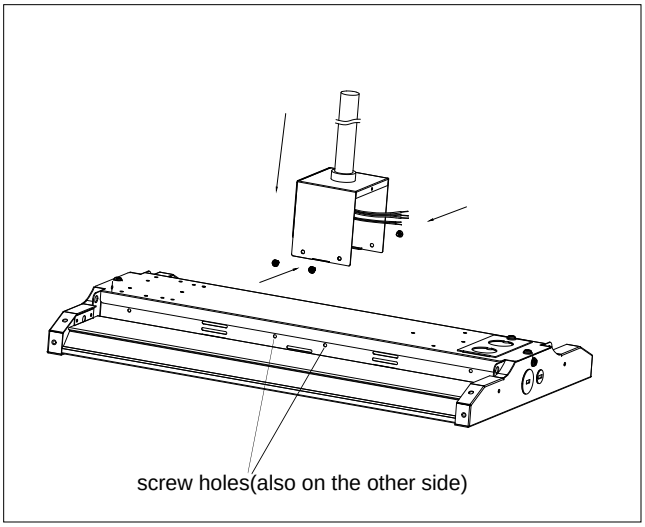

3. Make wiring connections refer to General Wiring Diagram.The bridged wires must be UL listed and wrapped with flexible protective conduit.

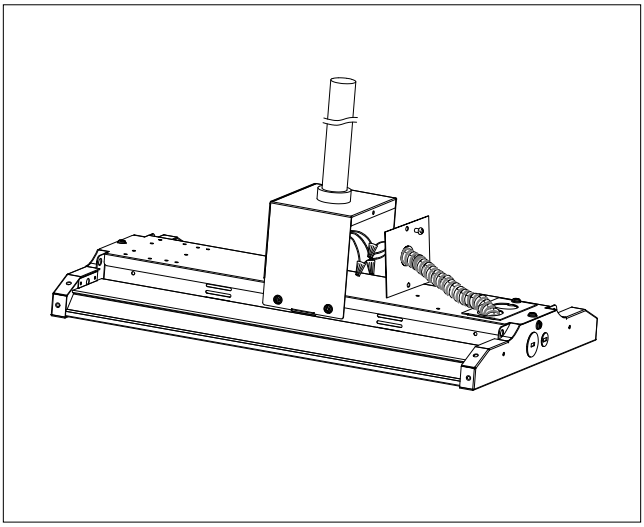

4. Install the two side-covers of the bracket with screws to hide the wires.

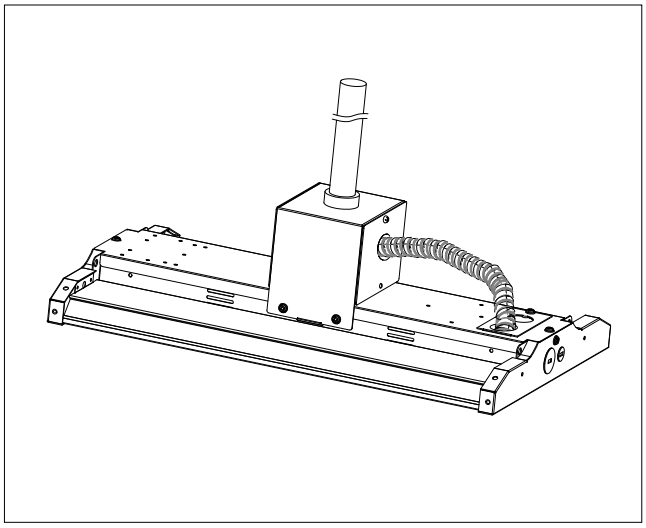

Note：If the outlet board located under the pendant box, do wiring connection directly in the box and no need to use the flexible protective conduit.All wire connectors or terminal caps should be left inside the pendant box.