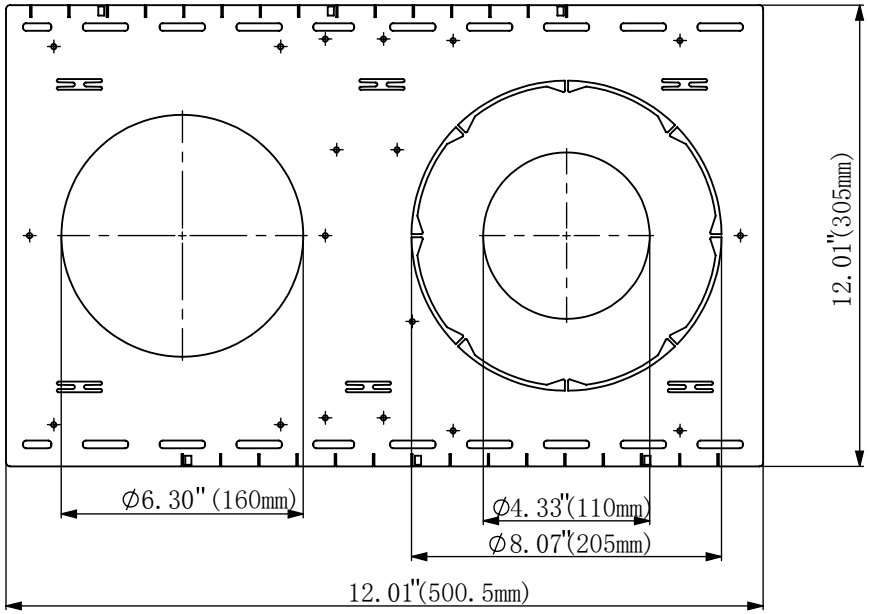


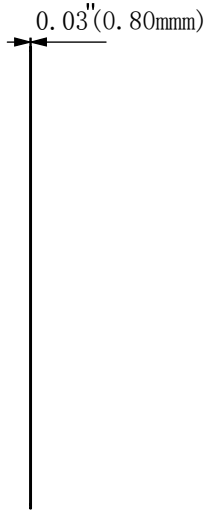


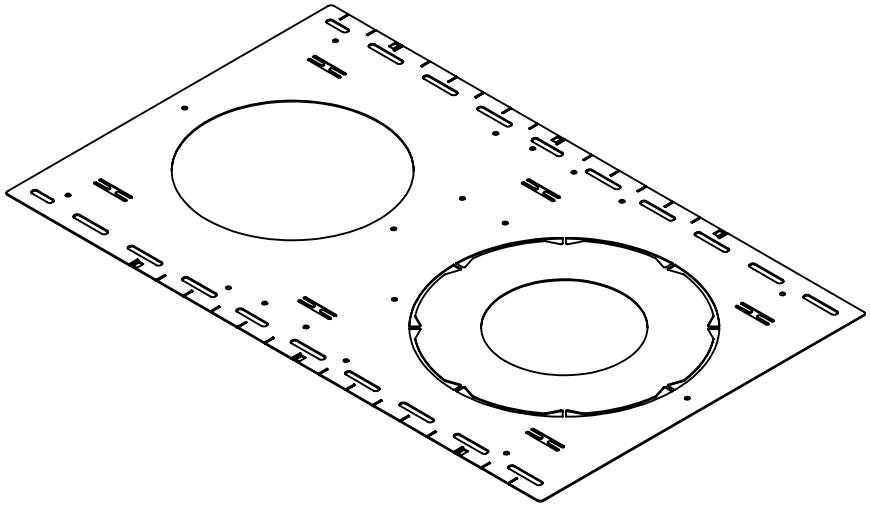

New Construction Plate for Stud/Joist