Selectable and Angle Adjustable LED UFO High Bay Light

Wattages: 240W, 280W, 320W



WATT/CCT SELECTABLE

Selectable and Angle Adjustable LED UFO High Bay Light series can be widely used in outdoor or indoor lighting(Wet location),Excellent for Museums,Underground parking lot,**Workshop, warehouse, gymnasium** and many more applications.

- ♦ LED high luminous efficiency and long working life.
- ♦ High efficiency LED Driver, the wide range input voltage AC120-277V/ 277-480V.
- ♦ Tool-free rotating lens to adjust the beam angle.
- ♦ Excellent optics design, greatly improve the light utilization and evenness.
- ♦ Wireless bluetooth system and Motion sensor control available (Optional)
- ♦ 12Vdc auxiliary dimming

Structure Features:

- ♦ Shell materials: Aluminum & PC
- ♦ Finish:BLACK(Standard)
- ♦ Net weight : 3.93Kg (8.7 lbs)
- ♦ Product Size : φ385X188mm (15.2"X7.4")
- ♦ Carton Size : 396X395X175mm (15.59"X15.55"X6.89")

DIMENSION:

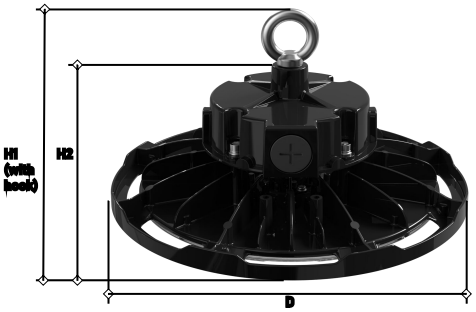

Size unit: inch(mm)

Size code	240-320W
Diameter, D	15.2(385)
Height 1, H1	7.4(188)
Height 2, H2	5.9(149)

SPECIFICATION			
TYPE	WSD-UFO242832W27-3545K-B-H-A6912		
WATTAGE	240W	280W	320W
LUMEN	35000lm	40000lm	47000lm
EFFICACY	> 145 lm/W		
CCT	3500K,4000K, 5000K		
CRI	80		
INPUT VOLTAGE	AC120-277V/277-480V		
BEAM ANGLE	60° 90° 120° (±5°)		
POWER FACTOR	0.95		
DRIVER EFFICACY	90%		
DIMMING	0-10V dimming 12V Auxiliary power		
FACTORY SETTINGS	320W & 4000K & 120°		
LIFE SPAN	over 50,000 hrs		
WORKING TEMPERATURE	-22°F ~ 113°F		
STORAGE TEMPERATURE	-40°F ~ 176°F		
OUTDOOR RATING	Wet location		
CABLE	3 core, 18AWG (71 inch)		
WARRANTY	5 year limited		

Selectable and Angle Adjustable LED UFO High Bay Light

Wattages: 240W, 280W, 320W

Bluetooth® (Option)



MOTION SENSOR and Bluetooth options

Hook (Standard)



Optical lens is made of high quality PC material to make the light even and soft.

High performance, die cast heat sink transfers heat from the light engine to the environment, via large cooling drawing heat away from the fixture, and extending the lifespan of the LEDs.

Top tier LEDs are driven well below recommended safety limits, on both drive current and junction temperature, to keep components cool – maintaining the life of the LED, allowing for a compact and eficient heat sink design.



WATT/CCT SELECTABLE



Selectable CCT
Three position sliding switch
3500K / 4000K / 5000K



Selectable Power
Three position sliding switch
240W / 280W / 320W

EMERGENCY BACK-UP (SOLD SEPARATELY)



WSD-EMUFO40W347-R
40W Emergency Backup Battery

Available only for low-voltage (120-277Vac) Luminaire models

LIGHT DISTRIBUTION ADJUSTABLE



Toggle the picks to rotate the lens

Tool-free

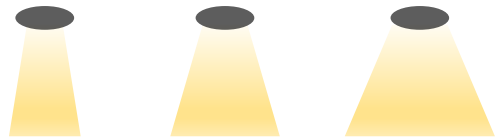

60°(±5°) 90°(±5°) 120°(±5°)

CONTROL (SOLD SEPARATELY)



Bluetooth®
NLC-BT-MW-SR-001
Bluetooth Microwave Fixture Sensor
(Silvair Bluetooth)



Bluetooth®
NLC-BT-MW-GE-001
Bluetooth Microwave Fixture Sensor
(GEBC Bluetooth)



NLC-MW-PT-002
Bi -level microwave Sensor



NLC-PIR-PT-001
Bi - Level PIR Motion Sensor



RC100
Remote Controller
(With NLC-MW-PT-002 and NLC-PIR-PT-001 use)



BRI-WS204-GE
4-Button Wireless Wall Switch
(Can only be used for NLC-BT-MW-GE-001)

ACCESSORIES (SOLD SEPARATELY)



WIRE GUARD
Item:
WSD-UFO-PNC-320W



Polycarbonate Cover
Item:
WSD-UFO-PC-320W



Glare shield on lens bottom
Item:
WSD-UFO-BPC-320W



Aluminum Lamp Shade
Item:
WSD-UFO-320W-ALS

Selectable and Angle Adjustable LED UFO High Bay Light

Wattages: 240W, 280W, 320W

MOUNTING (SOLD SEPARATELY)



Trunnion

Item: WSD-UFO-T
Trunnion, Mainly used for indoor or outdoor ceiling installation, can be directly mounted on the ceiling.

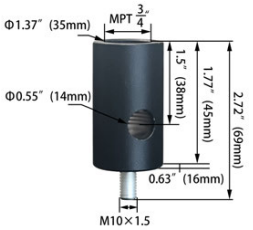

UFO High Bay Lights Pendant Adaptor

Item: PDUFO-M10-3/4
Main Parameters: bottom screw M10, top thread NTP3/4"
Material: Aluminum



HOOK

Item:
WSD-UFO-HOOK
Main Parameters:
bottom screw M10

MOUNTING (Standard)



HOOK

Item: WSD-UFO-HOOK-M10
Main Parameters: bottom screw M10

ORDERING INFORMATION

EXAMPLE: WSD-UFO242832W27-3545K-Z[D,W,B,S]-U[H,T]-E[Blank,M]-A6912

WSD	UFO	242832W	27	3545K	Z	U	E	A6912
COMPANY	PRODUCT	WATTAGE	VOLTAGE	CCT	FINISH	MOUNTING	CONTROL	ANGLES
WSD LED INC	**UFO** (UFO High Bay Light)	**242832W** 240W/280W/320W	**27** (AC120-277V) **48** (AC277-480V)	**35K** - (3500K) **4K** - (4000K) **5K** - (5000K)	**D** - (Dark Bronze) **W** - (White) **B** - (Black) **S** - (Silver)	**H** -(Hook) **T** -(Trunnion)	**M** (Motion Sensor)	**A6912** 60°/90°/120°

Selectable and Angle Adjustable LED UFO High Bay Light

WSD LED INC
Green Lighting Resources

Wattages: 240W, 280W, 320W



Bluetooth®

DIMENSION

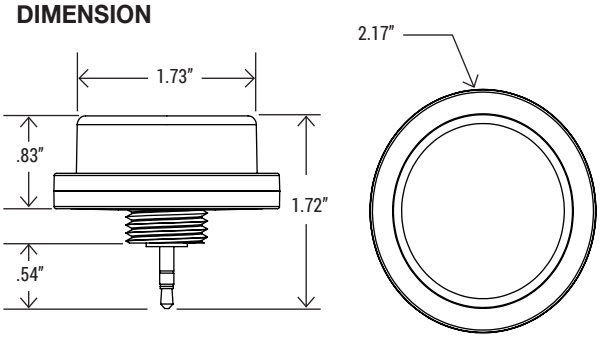

COVERAGE

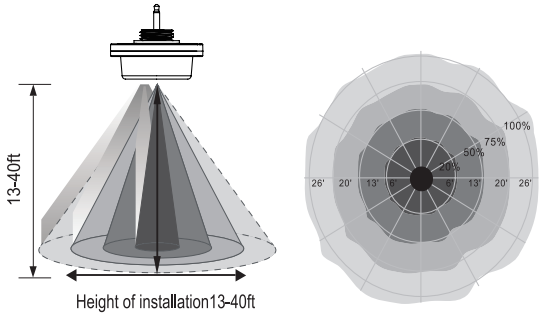

MICROWAVE SENSOR FEATURES	
DAYLIGHT HARVESTING	On/Off
MOTION SENSING	On/Off
FIRST TIME DELAY	1-59 mins/infinite
SECOND TIME DELAY	0-59 mins/infinite
DIM LEVEL	0-100%
MOUNTING HEIGHT	13-40ft
DETECTION RANGE	up to 52ft diameter
DETECTION: HORIZONTAL	360°
DETECTION: VERTICAL	90°

COMMISSIONING

Silvair iOS App or Android makes it easy to pair devices, create groups, set scenes/schedules, customize dimming levels, and adjust high trim based on application needs.

NLC-BT-MW-SR-001
Plug and Play Network BLE Nodes and Sensor

The Bluetooth Lighting Control provides automated individual and group control of light fixtures using on sensors and Bluetooth sigmesh technology. The NLC-BT-MW-SR-001 mounted in an Commercial lighting fixture and provides multi-level control solution based on motion and or daylight harvesting contribution.

FEATURES

- Lighting controls meet design lights consortium (DLC) networked lighting control system technical requirements.
- Quick connect and adjust different sensor angle.
- Easy commissioning with Mobile App (Available in IOS or Android).
- Bluetooth network with Saas working by computer
- Individual addressability and/or grouping.
- Time clock scheduling for individual lights, groups or scenes.
- Multi-level dimming: manual ON/OFF automatic ON/OFF, and automatic partial ON/OFF, daylight harvesting control capability.

SPECIFICATION	
NETWORK BLE MESH	Yes
DAYLIGHT HARVESTING	Yes
MICROWAVE MOTION SENSOR	Yes
DETECTION MODE	Occupancy/Vaccancy/Bi-level in 1 Unit
OPERATING VOLTAGE	12-24V DC
OPERATING CURRENT	>50mA
SINKING CURRENT	max. 25mA
CONTROL OUTPUT	0-10V
RADIO FREQUENCY	2.4GHz ± 75MHz
WIRELESS STANDARD	BLE 5.0 MESH
APP SYSTEM	Silvair iOS App (IOS or Android)
CYBERSECURITY	UL
ENCRYPTION	AES 128-bit
MESH RANGE	60ft node-to-node and 500ft node-to-device (Commissioning)
SAFETY	cULus Listed
FCC	FCC
OPERATING TEMP.	-20°C - +60°C
IP RATING	IP65
WARRANTY	5 year limited

Please scan and download the app.

Silvair App

iOS

Operation Instruction:
https://youtu.be/8KWPK7z_Tng

Android:

When using silvair, you can search for silvair in Android Google play to download and install it

Selectable and Angle Adjustable LED UFO High Bay Light

WSD LED INC
Green Lighting Resources

Wattages: 240W, 280W, 320W

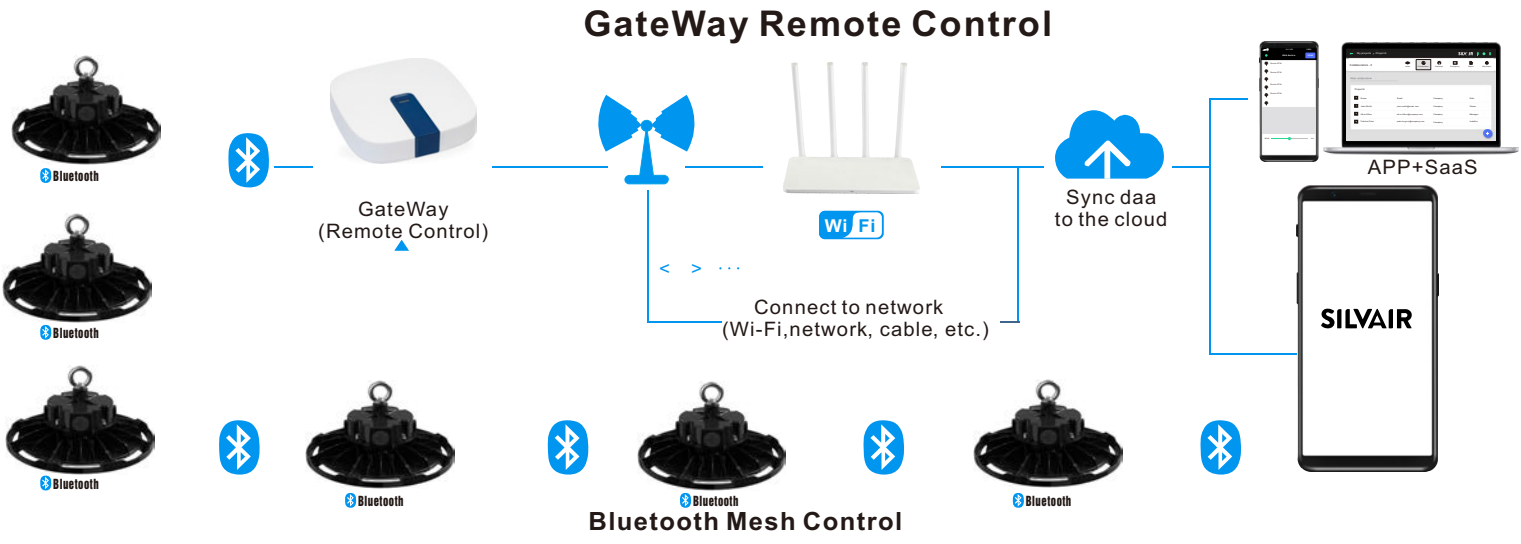



Functions:

The Silvair Gateway enables the following functions in the Silvair web app:

- Scheduling (available by default)
  - ○Scheduling changes in scenes and lighting control scenarios (for example occupancy sensing,daylight harvesting) for specific times or days.
- Energy and occupancy monitoring (additional paid service)
  - ○Visualizing energy use and occupancy via the Silvair web app.
  - ○Downloading energy and occupancy via the Silvair web app and cloud-based API.
- Remote monitoring and control (additional paid service)
  - ○ Low-latency monitoring of the status of devices in the network via API.
  - ○ Low-latency control of devices in the network via API. ● System diagnostics
  - ○ Monitoring of the status of Bluetooth mesh networks.
  - ○ Remote troubleshooting of networking issues.

Features:

- ●Future-proof Linux operating system.
- ●Simple commissioning using the Silvair Commissioning tools.
- ●Automatic connection to the Silvair cloud.
- ●Secure provisioning with secure IDs and encrypted keys.
- ●High level of hardware and software security (secure boot and encrypted file system can only be accessed with the management platform).
- ●Automatic security updates.
- ●Prompt releases of OS updates and fixes to vulnerabilities.
- ●Low-latency transfer of network, luminaire, and sensor status data to the Silvair cloud.
- ●Schedule caching.
- ●Automatic remote firmware updates.
- ●Display of gateway and network performance metrics (requires the Silvair web app).

INDUSTRIAL GATEWAY

SGW-101
Smart Engineering Gateway

The Silvair Gateway connects Bluetooth mesh networks that have been commissioned using the Silvair Commissioning tools to the Silvair cloud. This allows the scheduling of events and delivery of services based on the data generated by these networks.

SPECIFICATION	
POWER SUPPLY	4.5–5.5 V DC, 2 A Power over Ethernet 36–57 V DC (IEEE 802.3af)
OPERATING SYSTEM	Ubuntu Core
PROCESSOR	i.MX6ULL (Y2), 32-bit ARM 800 MHz
MEMORY	512 MB DDR3L SDRAM 8GB eMMC
COMMUNICATION PROTOCOLS	Bluetooth mesh (2.4 GHz Bluetooth Low Energy) Wi-Fi 802.11a/b/g/n/ac (2.4/5 GHz) 4G LTE Cat 1 with 2G/3G (only for Cascade-500-W and Cascade-500-X gateways)
PORTS	1 x RJ45 10/100 Ethernet 1 x USB 2.0 Type-A 2 x external dipole antenna, 5 dBi (only for Cascade-500-W and Cascade-500-X gateways)
REQUIRED AMBIENT TEMPERATURE	0°C to 60°C 32°F to 140°F
ENCLOSURE DIMENSIONS	127 mm x 127 mm x 30 mm (5 inch x 5 inch x 1.2 inch)
MOUNTING POSITION	Wall or surface mounted. As close to the geometrical center of the lighting network as possible, but as far as possible from potential sources of interference.
SECURITY	Secure boot with encrypted operating system Secure communication with the Silvair Cloud over Internet (TLS) Secure communication with devices over qualified Bluetooth mesh

Selectable and Angle Adjustable LED UFO High Bay Light

WSD LED INC
Green Lighting Resources

Wattages: 240W, 280W, 320W

PHOTOMETRICS

For complete IES data, please visit our website.

WSD-UFO242832W27-3545K-B-H-A6912 (320W 4000K 60°)

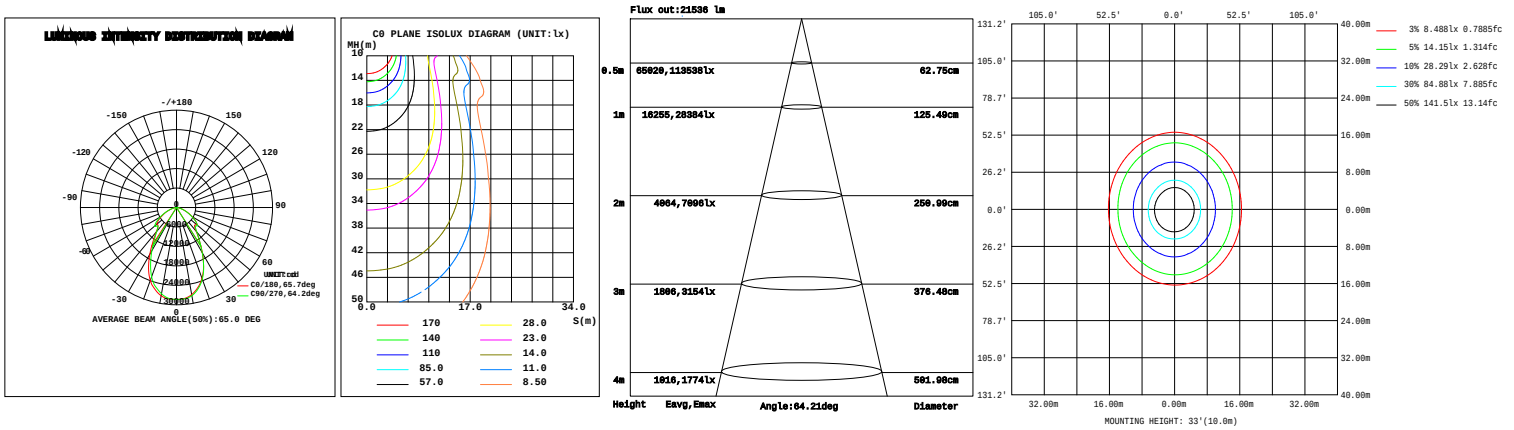

WSD-UFO242832W27-3545K-B-H-A6912 (320W 4000K 90°)

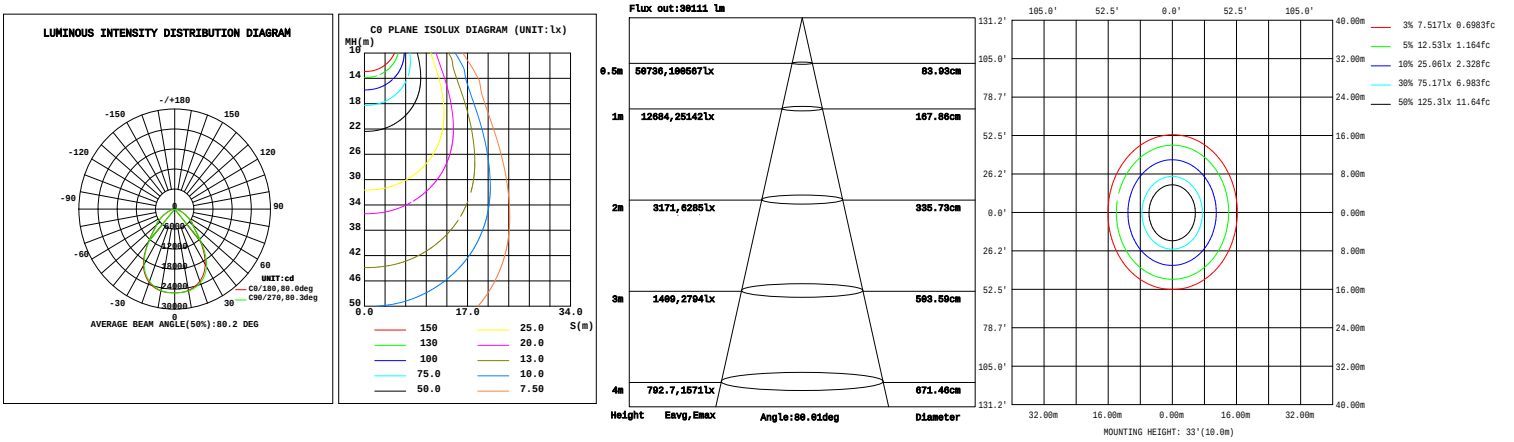

WSD-UFO242832W27-3545K-B-H-A6912 (320W 4000K 120°)

