LED Shoebox Light

MOUNTING GUIDES

S: SLIP FITTER MOUNTING

Dimensions of the slip fitter

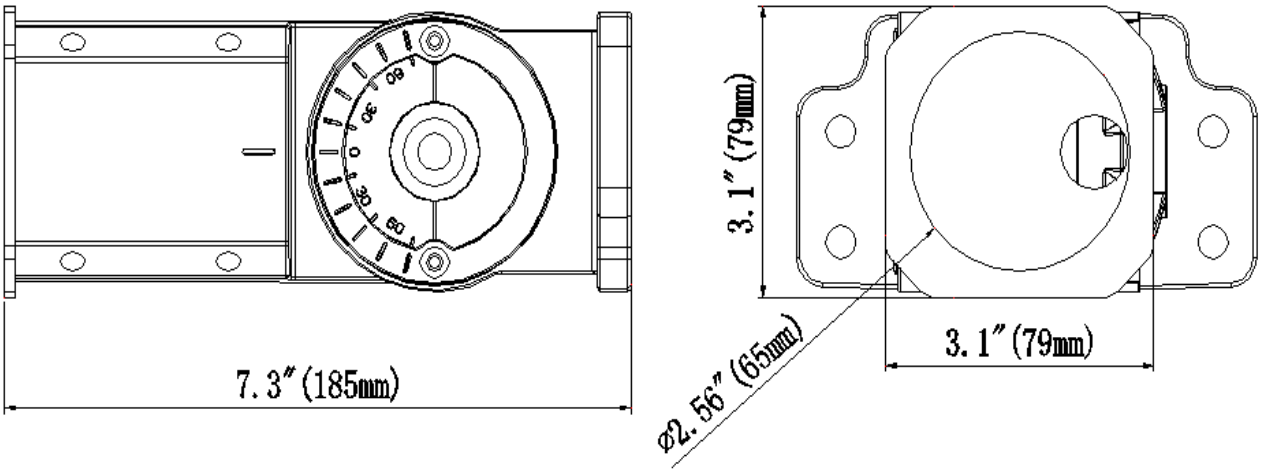

Step 1

Connect the AC wire, and then insert the arm of the slip fitter to the pole.

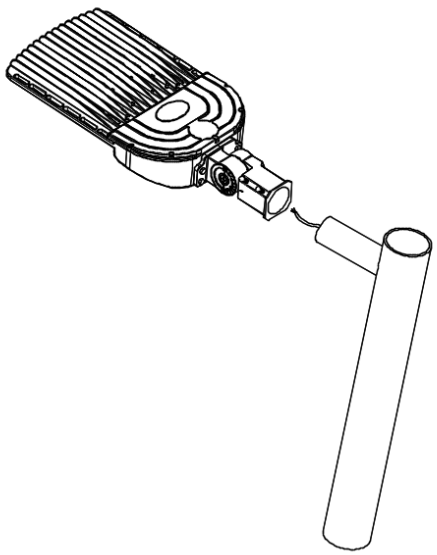

Step 2

Tighten the screws on the side of the arm and then power on.

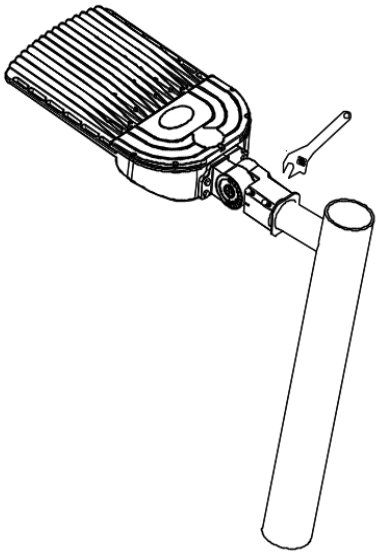

LED Shoebox Light

MOUNTING GUIDES

Slip fitter assembly drawing

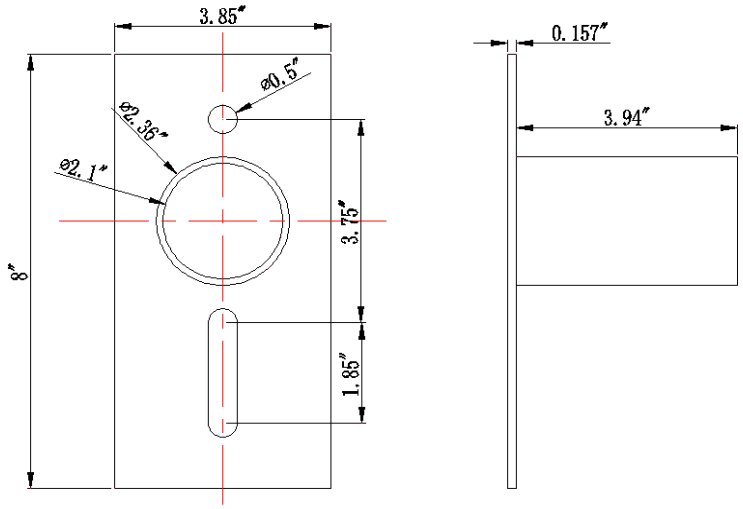

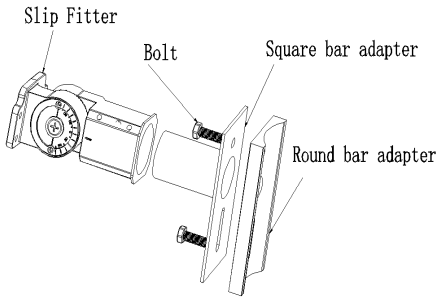

Step 1

Drill holes on the square pole corresponding to the holes on the square bar adapter, and use the bolt and nut plate to fix the fixture to the Adapter tightly.

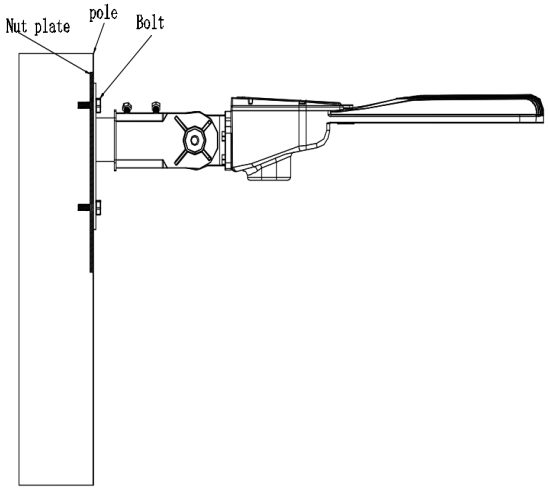

Step 2

Connect the AC wire of the fixture and tighten the water-proof gasket and cover plate on the square bar adapter by screws, then power on.

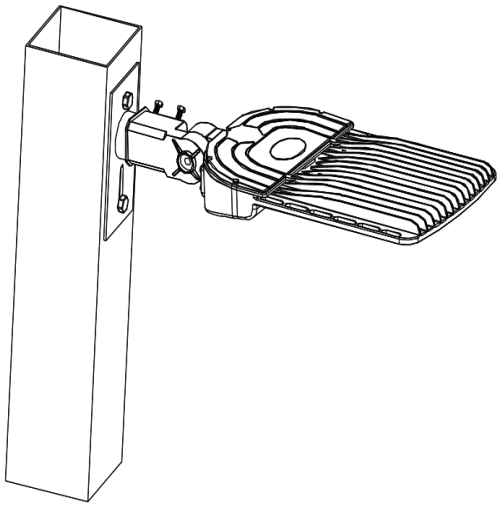

LED Shoebox Light

MOUNTING GUIDES

A2: SLIP FITTER MOUNTING FOR ROUND POLE

Step 1

Drill holes on the round pole corresponding to the holes on the Round bar adapter, and use the bolt and nut plate to fix the fixture to the Adapter tightly.

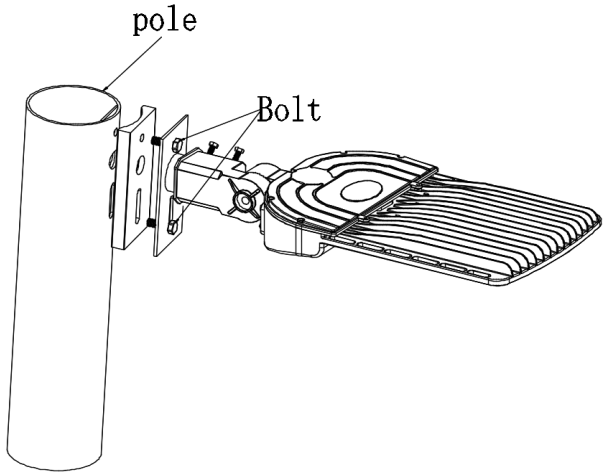

Step 2

Connect the AC wire of the fixture and tighten the water-proof gasket and cover plate on the square bar adapter by screws, then power on.

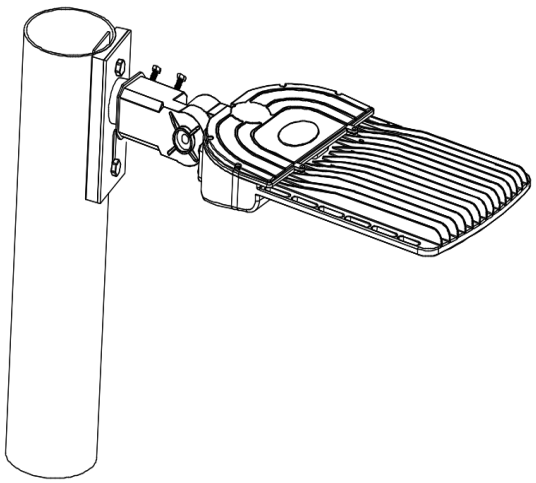

LED Shoebox Light

MOUNTING GUIDES

II T: TRUNNION MOUNTING

Dimensions of the trunnion

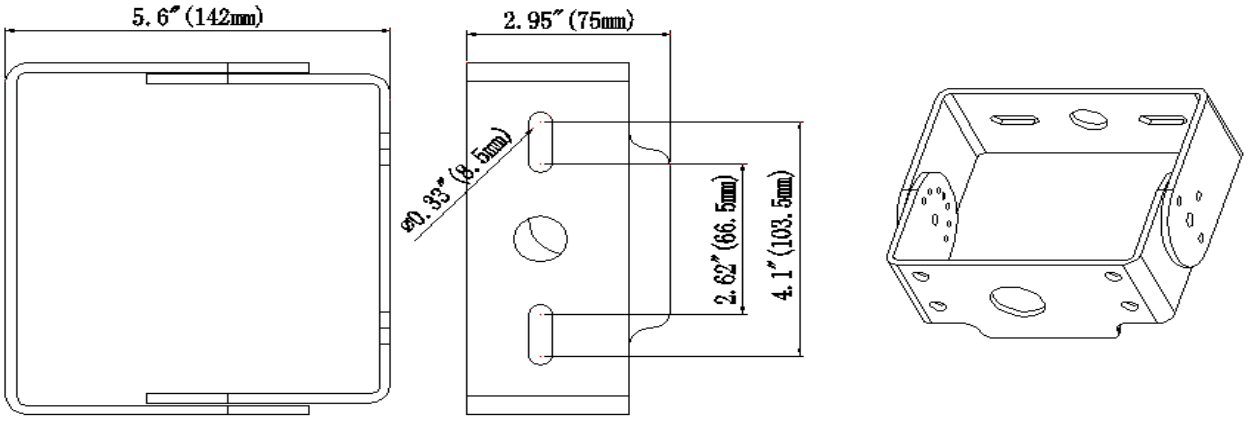

Step 1

Drill two holes on the wall corresponding to the holes on the trunnion, and knock expansion screws into the holes.

Step 2

Use the nuts to fix the fixture to the wall aiming at the expansion screws, and adjust angle of the bracket and tighten the small screw on the side, then connect the AC wire.

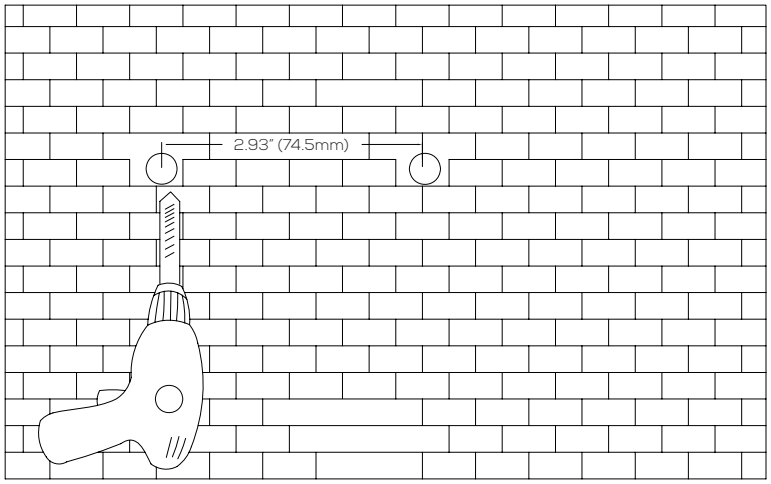

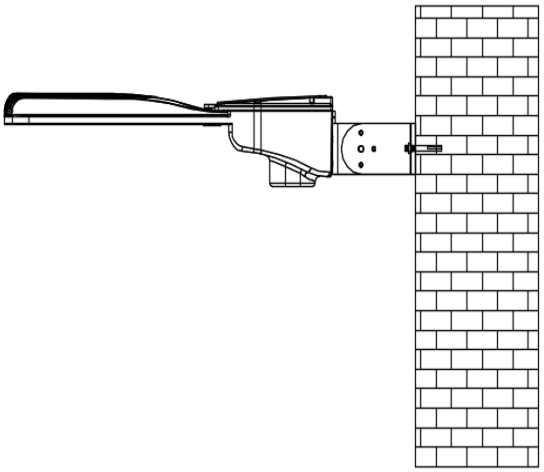

LED Shoebox Light

MOUNTING GUIDES

A1: ARM MOUNTING FOR SQUARE POLE

Arm dimensions

A

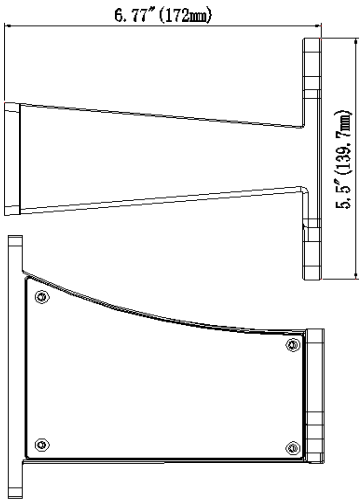

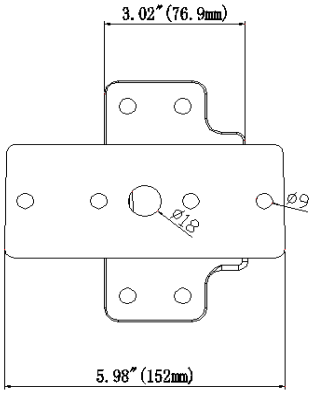

B

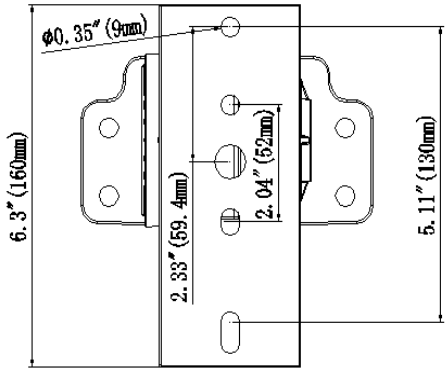

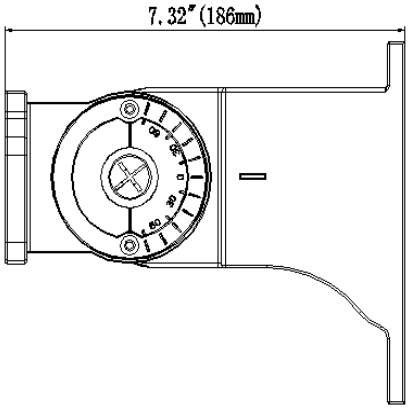

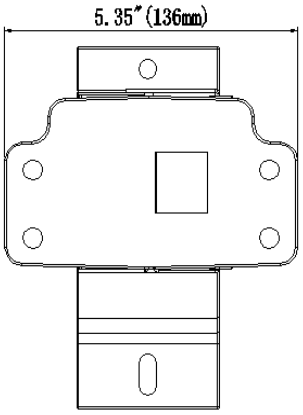

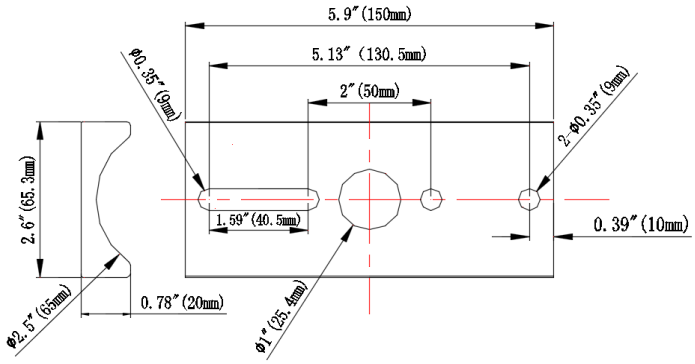

LED Shoebox Light

MOUNTING GUIDES

Arm assembly drawing

A

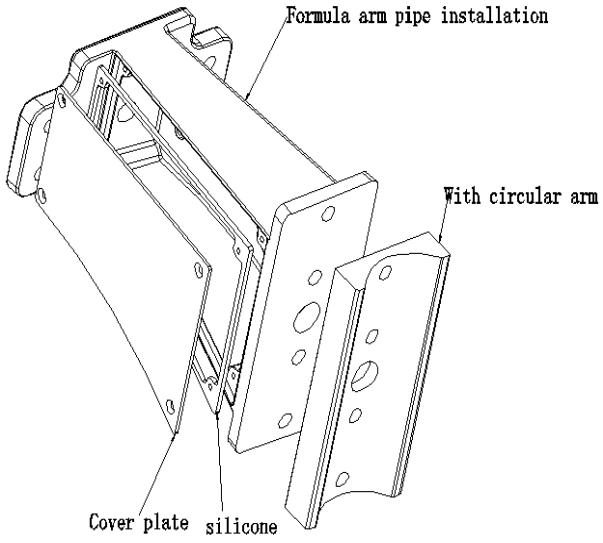

B

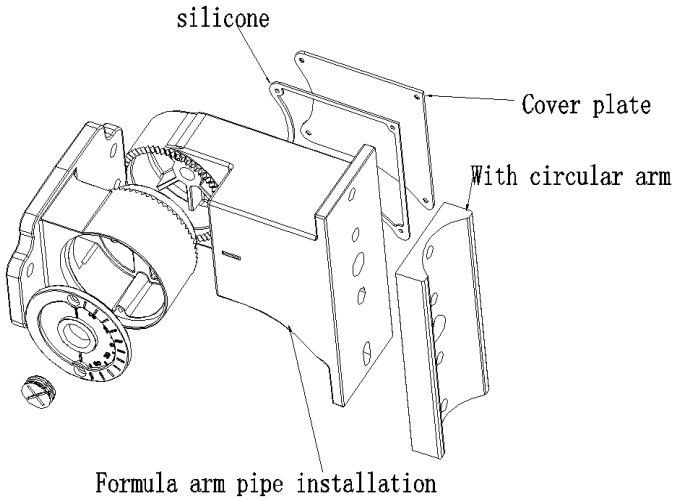

Step 1

Drill holes on the square pole corresponding to the holes on the arm, and use the bolt and nut plate to fix the fixture to the pole tightly.

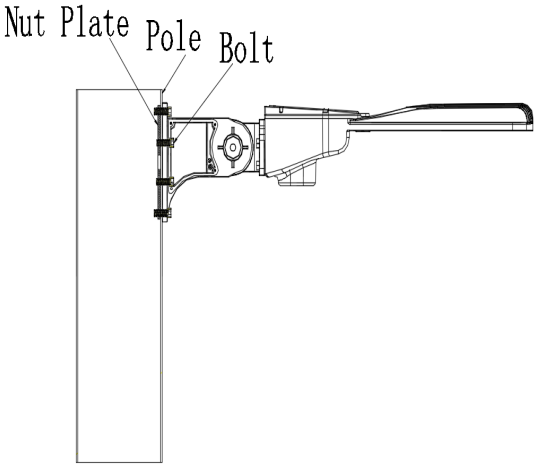

Step 2

Connect the AC wire of the fixture and tighten the water-proof gasket and cover plate on the arm by screws, then power on.

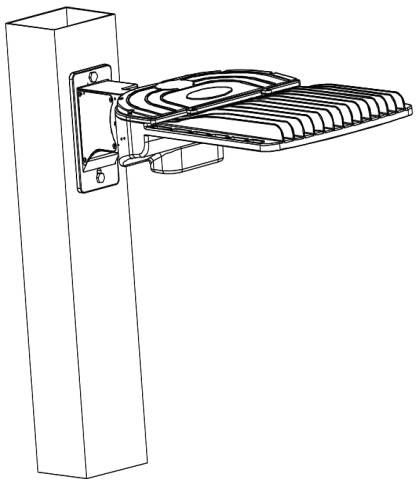

LED Shoebox Light

MOUNTING GUIDES

IV A2: ARM MOUNTING FOR ROUND POLE

Step 1

Drill holes on the round pole corresponding to the holes on the arm, and use the bolt and nut plate to fix the fixture to the pole tightly.

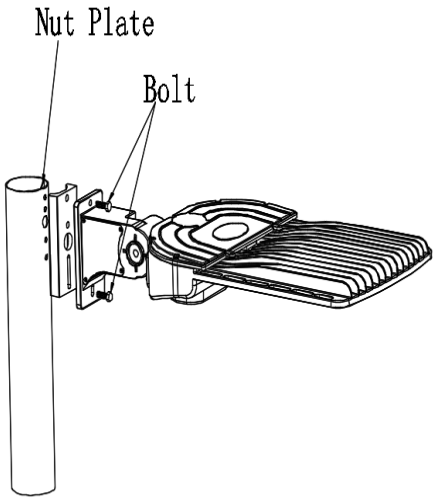

Step 2

Connect the AC wire of the fixture and tighten the water-proof gasket and cover plate on the arm by screws, then power on.

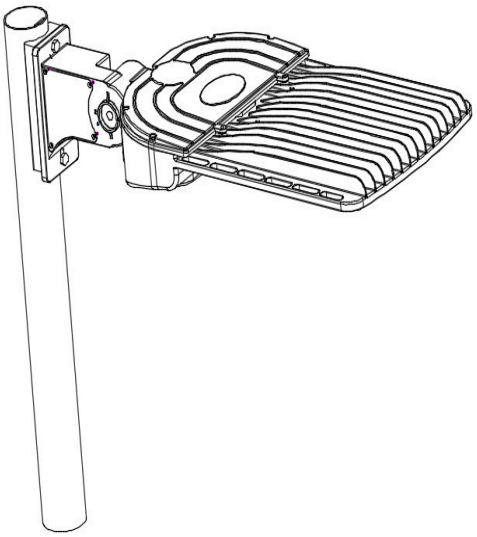

400W LED Shoebox Light

MOUNTING GUIDES

Arm with Photocell Installation

Step 1

As shown in the picture, open the connection box cover of the steering arm.

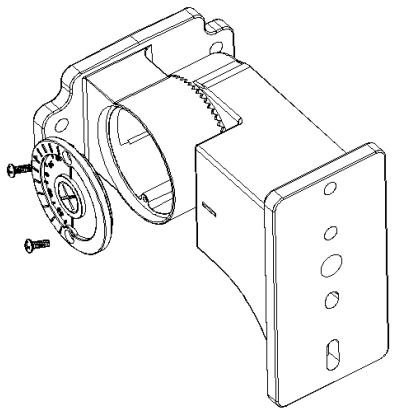

Step 2

As shown in the picture, the holes of the photocell in the junction box match with the screws of the mounting arm, then rotation and adjust the direction of the photocell, to ensure that the photocell is perpendicular to the ground.

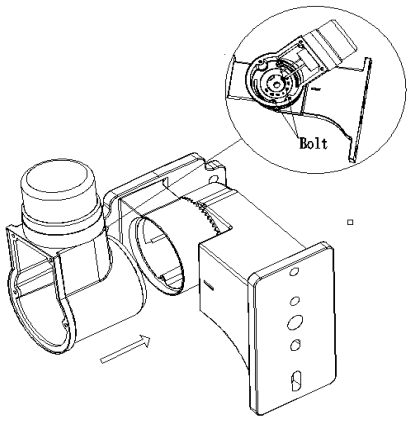

Step 3

Connect the photocell base with AC line and check it correctly. As the picture is shown, lock the junction box cover and turn on the electricity.

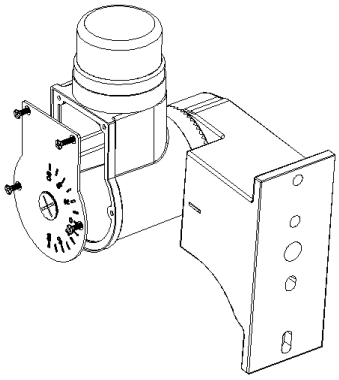

Step 4

Assembly drawing

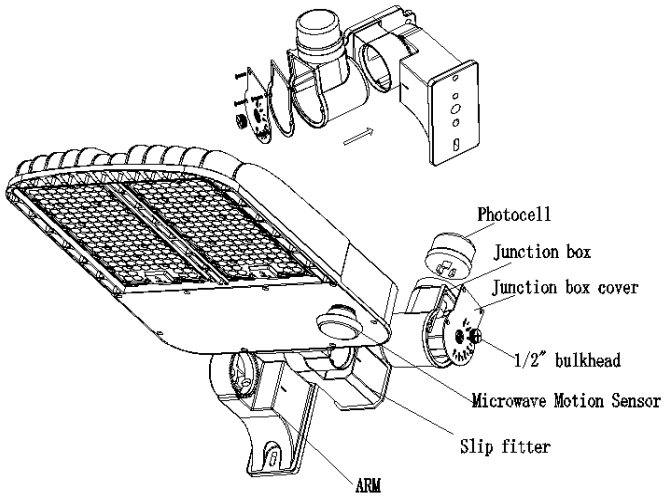

Wiring drawing for photocell

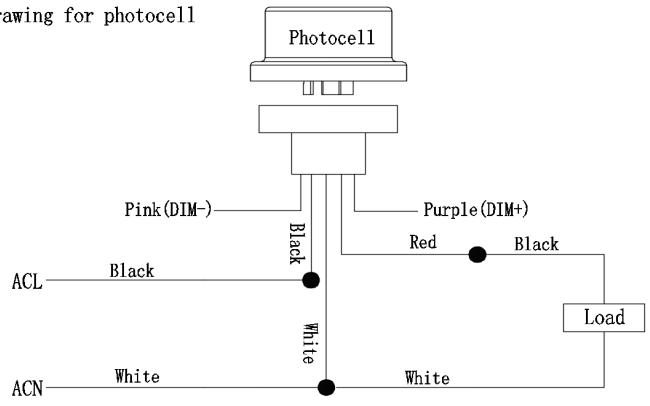

LED Shoebox Light

MOUNTING GUIDES

V CCT & Wattage Adjustable installation instructions

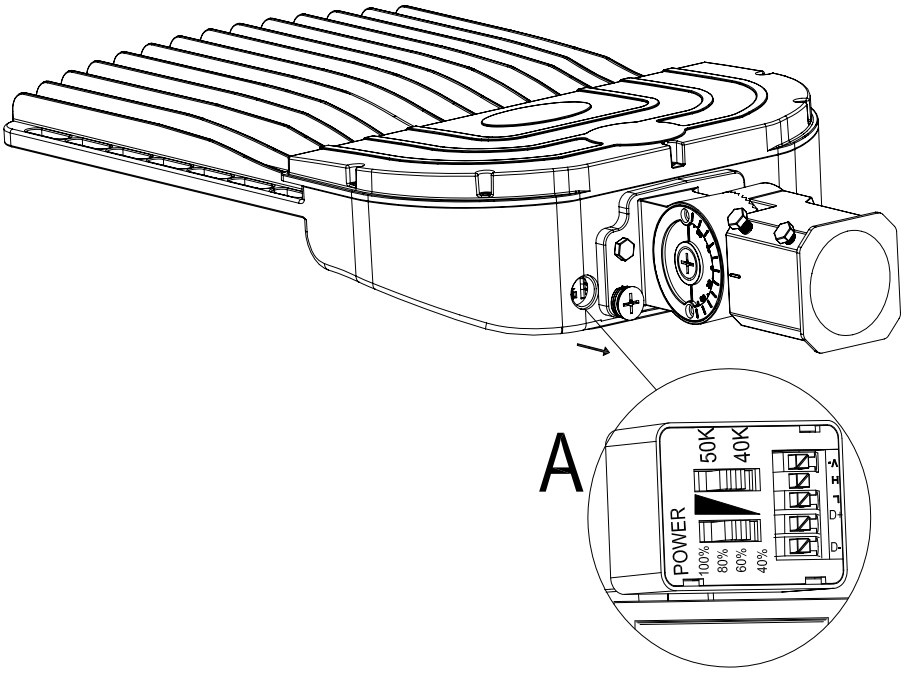

1）.Like picture A, Unscrew the plug, adjust wattage and cct as desired, and tighten the plug .

Wiring drawing for CCT & Wattage Adjustable

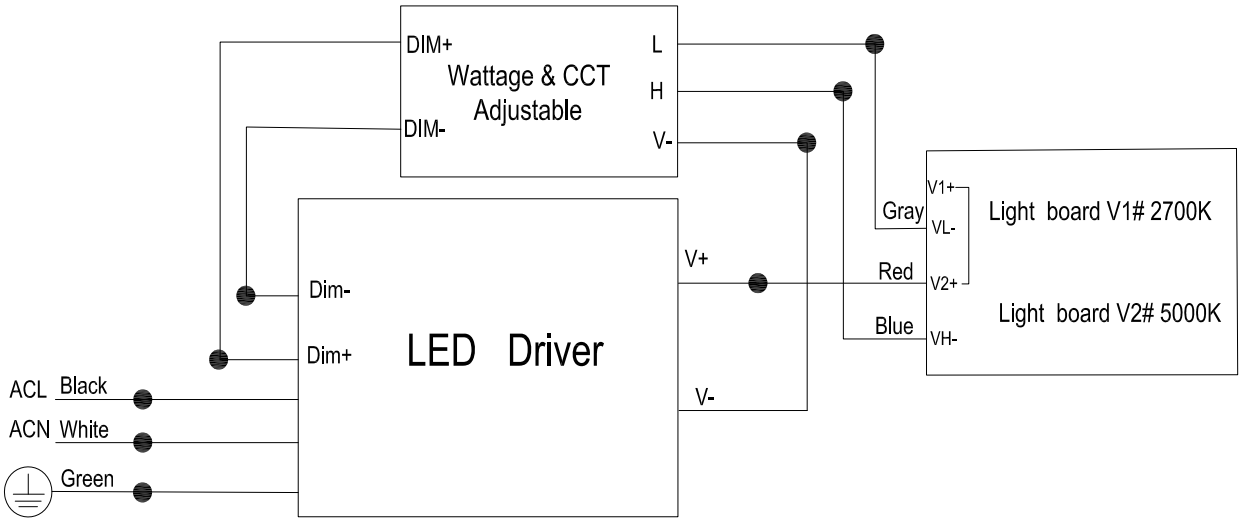

Wiring drawing Foy Photocell and Microwave Motion Sensor

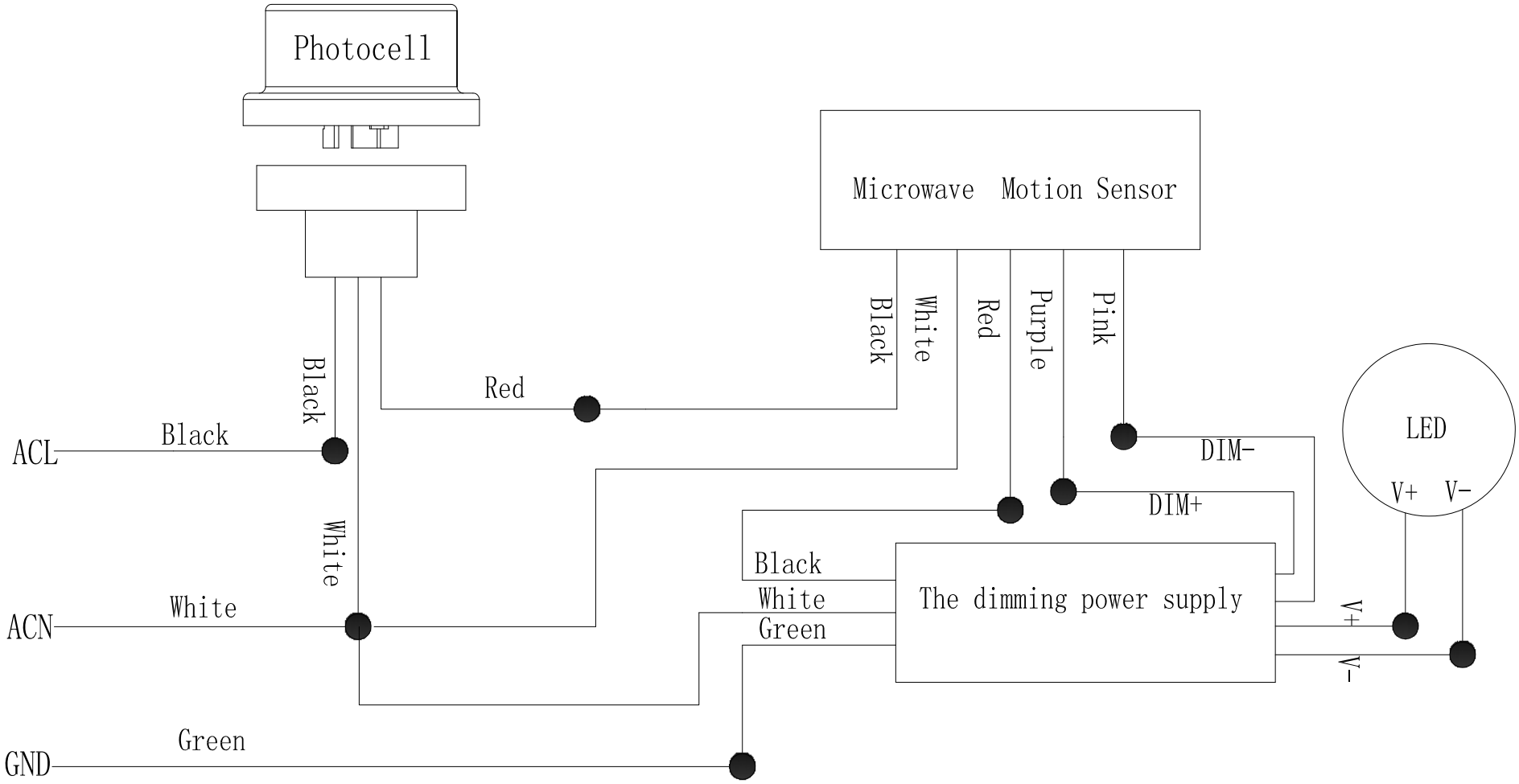

Wiring drawing For Microwave Motion Sensor

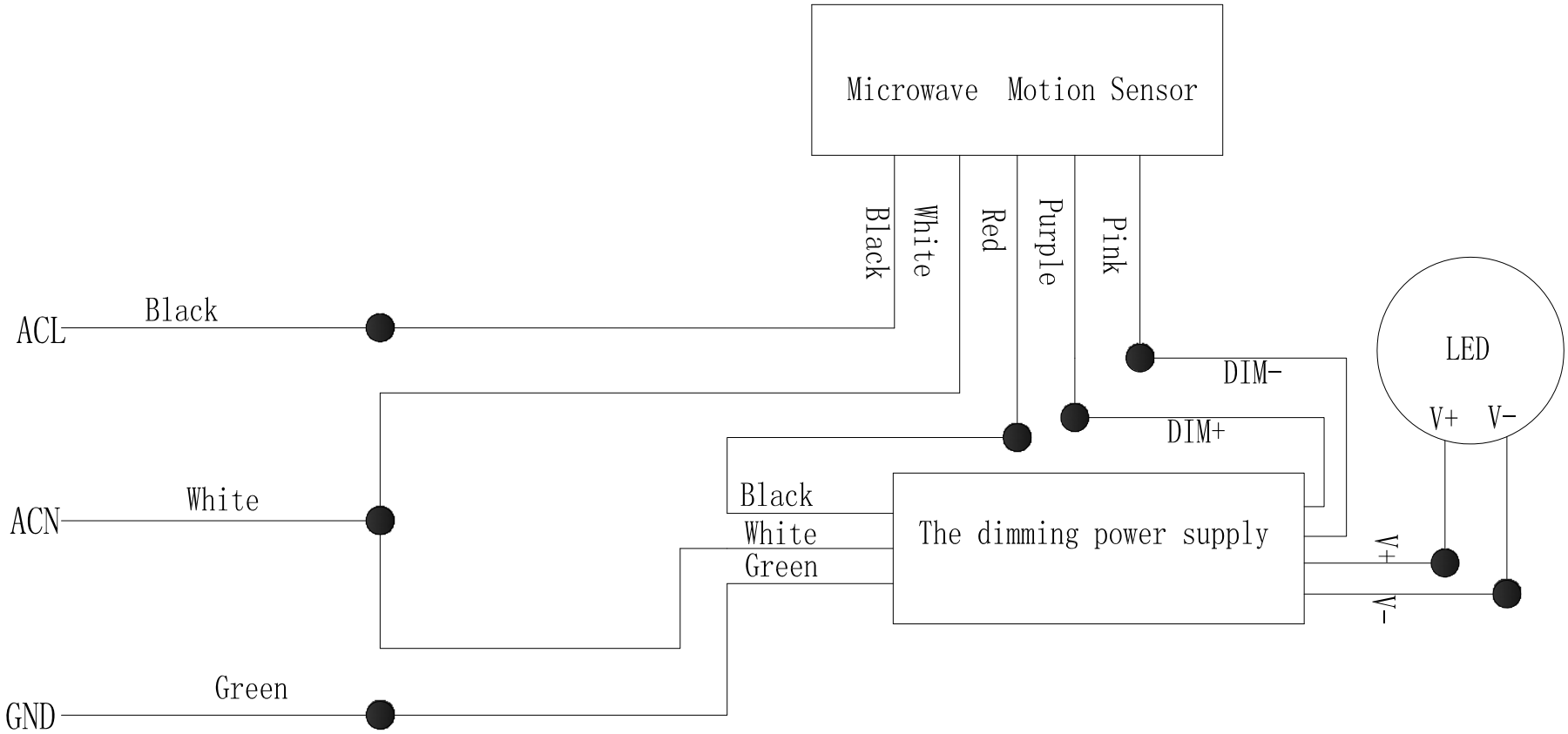

LED Shoebox Light

MOUNTING GUIDES

VI QUALITY ASSURANCE

- Quality assurance is based on proper storage, transportation, installation, using and maintenance
- Damages caused by man-made mistake or improper use are not covered by the warranty
- Risk of electrical shock!
- During the warranty period, the manufacturer will provide appropriate support and repair service according to the actual situation

WARNINGS AND CAUTIONS

- The product must be installed according to the instructions. Installed by a person familiar with the product, production and product hazards.
- Avoid fire and electric shock. When install the lighting fixtures, you need to understand the electrical characteri stics. If you are not sure, do not attempt to install. Please contact the electrician.
- Understand the structural features and dimensions of lighting before installation
- Do not drill holes or change internal lines when install