Selectable LED Glass Wall Pack Light

Installation Guide

WARNING

1. To avoid electric shock, disconnect power at source prior to installation.
2. The installation should be performed by qualified electricians or lighting technicians.
3. Before conducting any installation, maintenance, or removal, disable all power to the luminaries and wait until the fixture cool down.
4. Do not touch the fixture while it is in service.
5. If there is any problem with the fixture, DO turn off power and DO NOT attempt repair unless you are a qualified technician or the customer service member.
6. This luminaire is designed to operate in ambient temperatures ranging from -40°c to 40°c and to be horizontally mounted with the LEDs facing down.
7. This product is not available for several special environments, such as places with corrosive gas liquids or high pressure water vapor.

1. Junction box Mounting

1. Loosen screws and remove the front case set carefully from the back plate. (Angle between front case and back plate varies from 0 degree to 45 degree. Push up to take down the front case.)
2. Remove 1/2" plug in center (B) for wiring, the fixture supports standard 3 1/4" and 4"Junction box.
3. Attach the back plate on the wall, use the supplied gaskets for a weather tight seal.
4. Finish wiring (Black for Line, White for Neutral and Yellow Green for Ground).
5. Replace the lens set on the hinges, make connections and close the lens set then tighten the screws.
6. When there are two drivers please make sure the individual driver is connected to the same PCB circuit. Connect one driver output wire to the longer “Red” and “Blue” wires for one circuit and the shorter “Red” and “Blue” wires for another.
7. While using a color temperature power controller, making electrical connections ensures red wire for V+, black for VH and blue for VL.

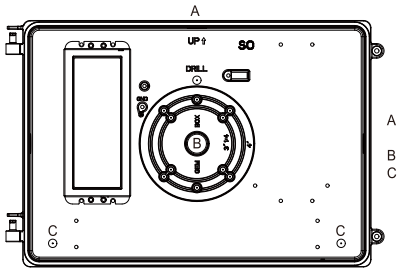

A - 1/2" NPS tapped holes (surface conduit or photo control)
B - 1/2" Nps Tapped Holes
C - 5/16" dia. Screw hole

2. Conduit Mounting

1. Loosen screws and remove the front case set carefully from the back plate. (Angle between front case and back plate varies from 0 degree to 45 degree. Push up to take down the front case.)
2. Remove 1/2” plug from where you intend to feed conduit .
3. Drilling out the holes (C) to secure it on the wall with choosing proper screws.
4. Finish wiring (Black for Line, White for Neutral and Yellow Green for Ground).
5. Replace the lens set on the hinges, make connections and close the lens set then tighten the screws.
6. When there are two drivers please make sure the individual driver is connected to the same PCB circuit. Connect one driver output wire to the longer “Red” and “Blue” wires for one circuit and the shorter “Red” and “Blue” wires for another.
7. While using a color temperature power controller, making electrical connections ensures red wire for V+, black for VH and blue for VL.

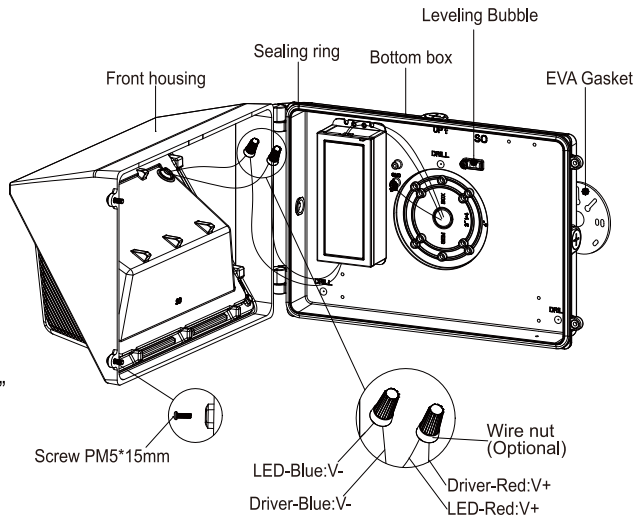

Note: To ensure waterproof seal , apply weatherproof silicone sealantaround the edge of the wall mounting box and /or junction box. This is especially important with an uneven wall surface. Silicone all plugs and unused conduit entries.

Power and CCT selectable version(Optional)

1. Loosen the two PM5*15 screws on the side of the fixture, open the front cover of the housing, and adjust the DIP switch to the corresponding color temperature and power in the actual application requirements. Instructions are as follows:

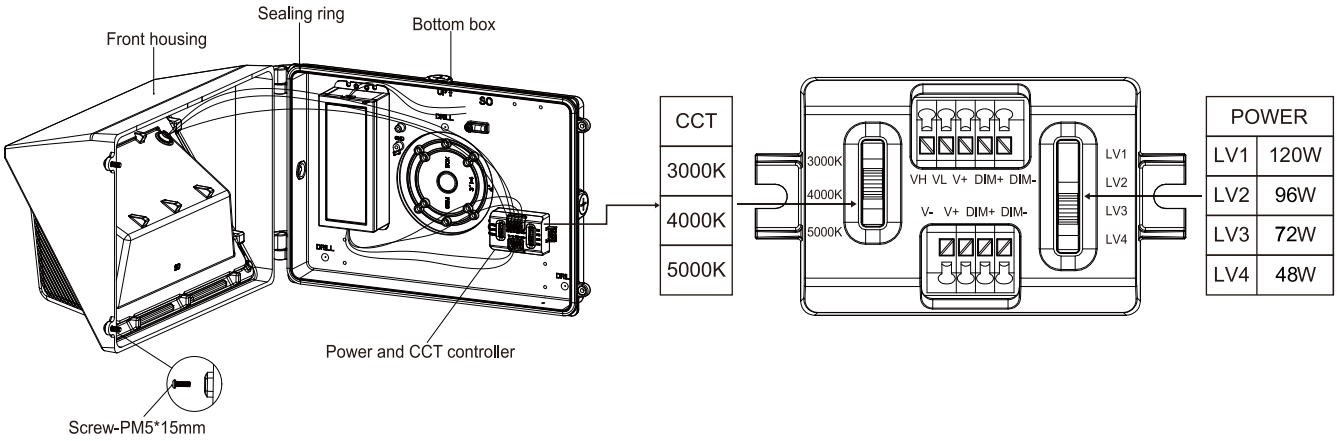

2. Make sure that all wires are securely connected and that there are no exposed conductors. Cover the fixture, (Make sure wires do not get pinched) then tighten the screws.

Caution: All electrical work must conform to the National Electric Code (NEC) and all applicable local codes and ordinances.

TROUBLESHOOTING

1. Check that the line voltage at the fixture is correct. Refer to wiring directions.
2. Is the fixture grounded properly.
3. Be sure the photocell, if used, is functioning properly.

WIRING DIAGRAM

For dimming version, please check wiring diagram below.

WITHOUT EMERGENCY BATTERY

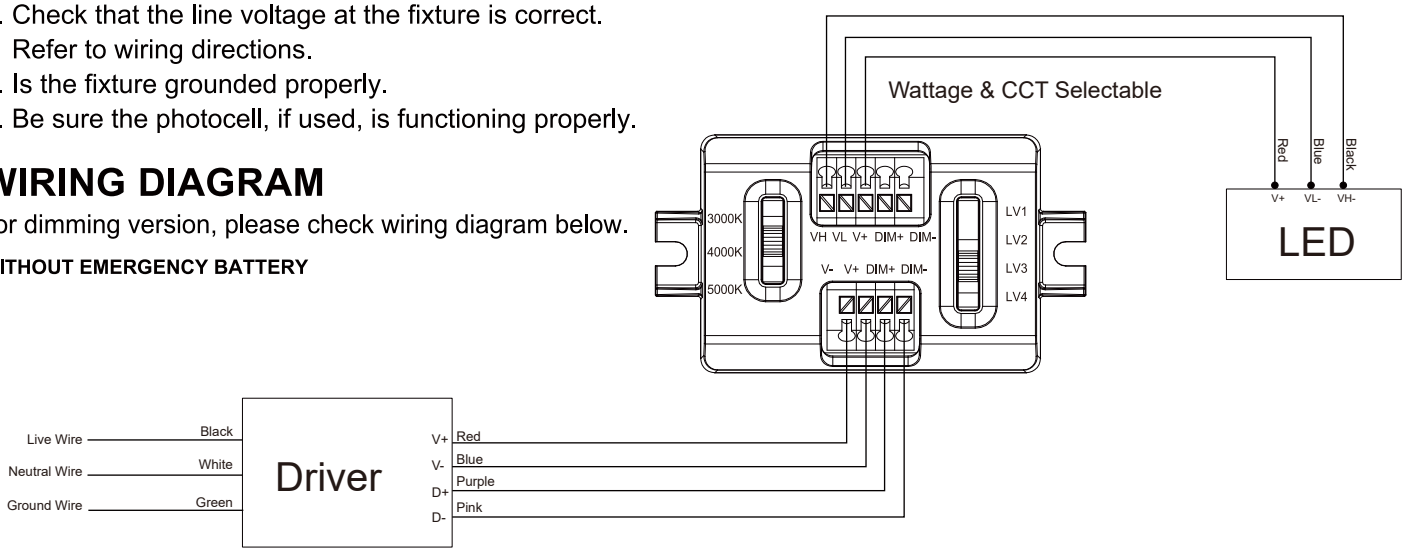

PHOTOCELL INSTALLATION

Universal voltage driver permits operation at 60 Hz except fixtures factory ordered with a 120-277VAC (P0)

1. Install photocell and wire as per diagram.
2. Use photocell rated for your supply voltage.

