Sensor Based LED TROFFER LIGHT

WSD LED INC
Green Lighting Resources

Wattages: 14W,17W,20W,28W ; 20W,28W,34W,41W



The Sensor Based LED Troffer Lighting Series can be widely used for Indoor Excellent for Offices, Hallways, Multipurpose Rooms , Office Buildings, Conference Rooms,super market, store and many other applications.

Lighting controls meet design lights consortium (DLC) networked lighting control system technical requirements, LLLC, Energy Monitoring and High End Trim function.

Features:

- Energy efficient: save up to 80% in energy costs
- Lens made of acrylic material (PMMA).
- High lumen output
- It uses a 2 .5mm port base
- Instant-on light
- 50,000 hours at 70% lumen maintenance rated life
- 5 years manufacturer warranty
- Compatible with most Lutron and Leviton dimmers
- 12Vdc auxiliary dimming
- The 0-10V Dimming type is continuous

Packaging information:

❖**14TRF14172028W27-5CCT:**
1230MMX307MMX113MM(2Pcs/CTN)
(48.43" X12.09" X4.45")

❖**22TRF14172028W27-5CCT:**
620MMX620MMX123MM(2Pcs/CTN)
(24.41" X24.41" X4.84")

❖**24TRF20283441W27-5CCT:**
1230MMX620MMX123MM(2Pcs/CTN)
(48.43" X24.41" X4.84")

SPECIFICATION			
TYPE	14TRF14172028W27-5CCT	22TRF14172028W27-5CCT	24TRF20283441W27-5CCT
WATTAGE	14W/17W/20W/28W	14W/17W/20W/28W	20W/28W/34W/41W
LUMEN	1896 lm/2363 lm/2752lm/3702lm	1979 lm/2452 lm/2844lm/3845lm	3390 lm/4629 lm/5375lm/6442lm
EFFICACY	> 140 lm/W		
CCT	3000K,3500K,4000K,5000K,6500K		
CRI	> 80		
INPUT VOLTAGE	AC120-277V		
LIGHTING ANGLE	119°		
FACTORY SETTINGS	28W & 4000K		41W & 4000K
LED TYPE	SMD2835		
WARRANTY	5 year limited		
PF	> 0.98		
DRIVER EFFICIENCY	> 90%		
PROTECTION LEVEL	Damp		
LIFE TIME	> 50000 hours		
OPERATING TEMPERATURE	-20℃~50℃(-4°F~122°F)		

Sensor Based LED TROFFER LIGHT

WSD LED INC
Green Lighting Resources

Wattages: 14W,17W,20W,28W ; 20W,28W,34W,41W

DIMENSION:

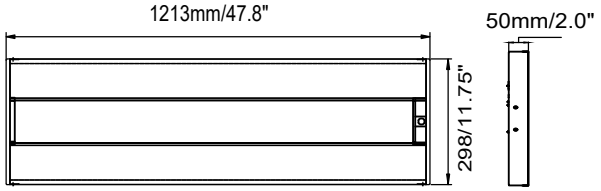

1X4 feet

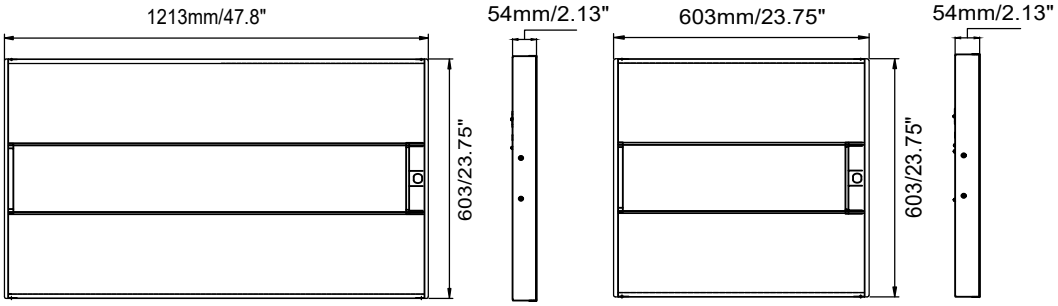

2X4 feet　　2X2 feet

Specifications:

Troffer-14/22/24

Length: 1213MM/603MM/1213MM
(47.8"/23.75"/47.8")

Width: 298MM/603MM/603MM
(11.75"/23.75"/23.75")

Depth: 50MM/54MM/54MM
(2.0"/2.13"/2.13")

Weight: 7.7/6.8/11.4(lbs)

Mounting:

❖ Embedded installation.

CONTROL MODULE:





WATT/5CCT
FIELD-ADJUSTABLE

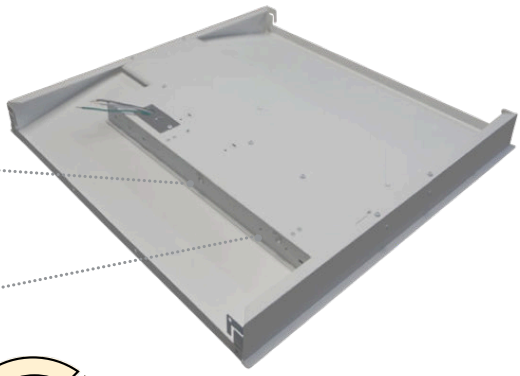



Selectable 5CCT

Three position sliding switch
3000K / 3500K / 4000K /
5000K / 6500K



Selectable Power

Three position sliding switch
14W / 17W / 20W / 28W
20W / 28W / 34W / 41W

Multiple sensor solutions ready

- Quick and easy in-field installation of sensors.





- Integrated occupancy and daylight controls.



The sensor receptacle is pre-embedded in the profile frame.

Sensor Based LED TROFFER LIGHT

Wattages: 14W,17W,20W,28W ; 20W,28W,34W,41W

ACCESSORIES: (SOLD SEPARATELY)



WSD-EML08W27-XX
WSD-EML15W27-XX
WSD-EML20W27-XX
8W/15W/20W Emergency Backup Battery LED Driver



6FTPRWG-3/8-3PIN
6FTPRWG-3/8-5PIN
6FTPRWG-3/8-6PIN
6FT 3/8 inch Metal Flexible Conduit

CONTROL (SOLD SEPARATELY)



Bluetooth
NLC-BT-PIR-SR-001
PIR Bluetooth Microwave Sensor For Silvair Systems
(Silvair Bluetooth)



Bluetooth
NLC-BT-PIR-GE-001
PIR Bluetooth Microwave Sensor For GEBC Systems
(GEBC Bluetooth)



NLC-PIR-SQ-001
Bi-Level PIR Infrared Sensor



RC-100
(With NL C-PIR-SQ-0 0 1 use)
Remote Controller



BRI-WS204-GE
4-Button Wireless Wall Switch
(Can only be used for NLC-BT-PIR-GE-001)

ACCESSORIES: (ACCESSORIES NEED TO PURCHASED SEPARATELY)



WSD-TF22FRAME-W-G2
2X2 feet SURFACE MOUNT KIT



WSD-TF24FRAME-W-G2
2X4 feet SURFACE MOUNT KIT



WSD-TF14FRAME-W-G2
1X4 feet SURFACE MOUNT KIT

Sensor Based LED TROFFER LIGHT

WSD LED INC
Green Lighting Resources

Wattages: 14W,17W,20W,28W ; 20W,28W,34W,41W

ORDERING INFORMATION:

EXAMPLE:

14TRF14172028W27-5CCT-E[Blank,BLE,EC,M,ECM]

14	TRF	14172028W	27	5CCT	E
SIZE	PRODUCT	POWER	VOLTAGE	CCT	CONTROL
14 - (1X4feet) **22** - (2X2feet) **24** - (2X4feet)	**TRF** Led Troffer Light	**14172028/20283441** 14W/17W/20W/28W 20W/28W/34W/41W	**27** AC120-277V	**5CCT** 3000K/3500K/4000K /5000K/6500K	**BLE**(Bluetooth) **EC**(Emergency) **M**(Motion Sensor) **ECM**(Emergency+ Motion Sensor)

PHOTOMETRICS:

For complete IES files, please visit our website.

14TRF14172028W27-5CCT (28W&3500K)

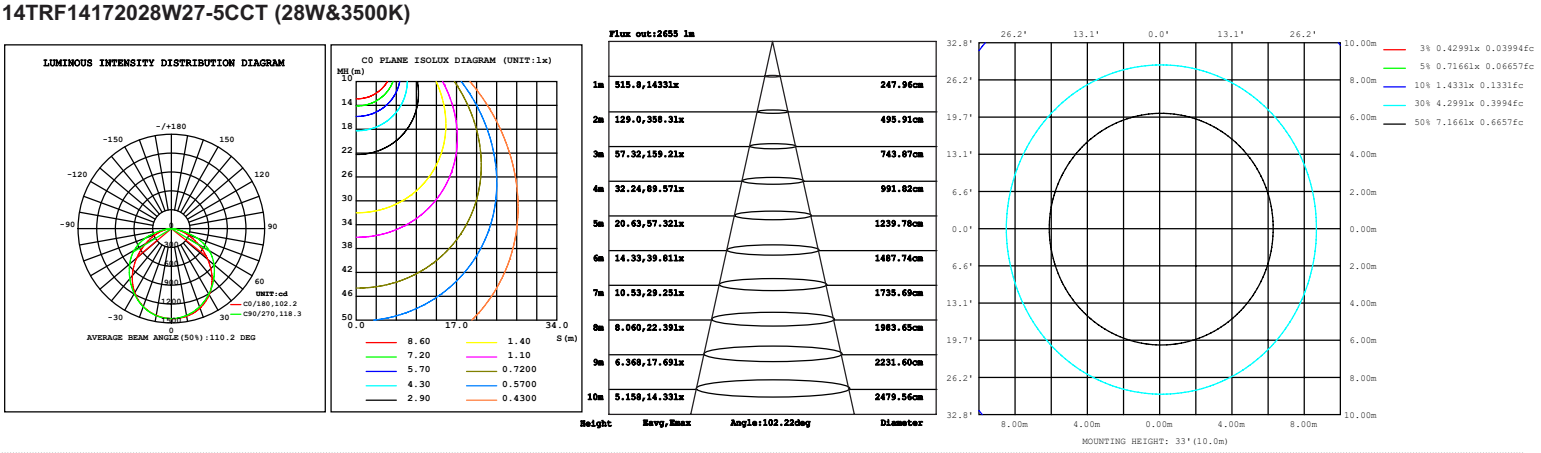

22TRF14172028W27-5CCT (28W&3500K)

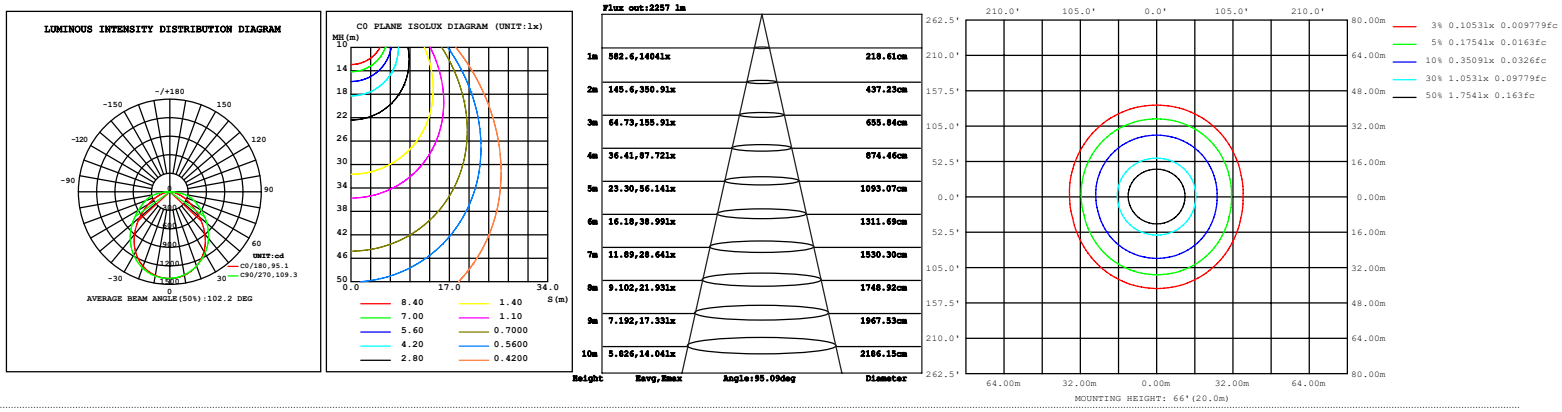

24TRF20283441W27-5CCT (41W&3500K)

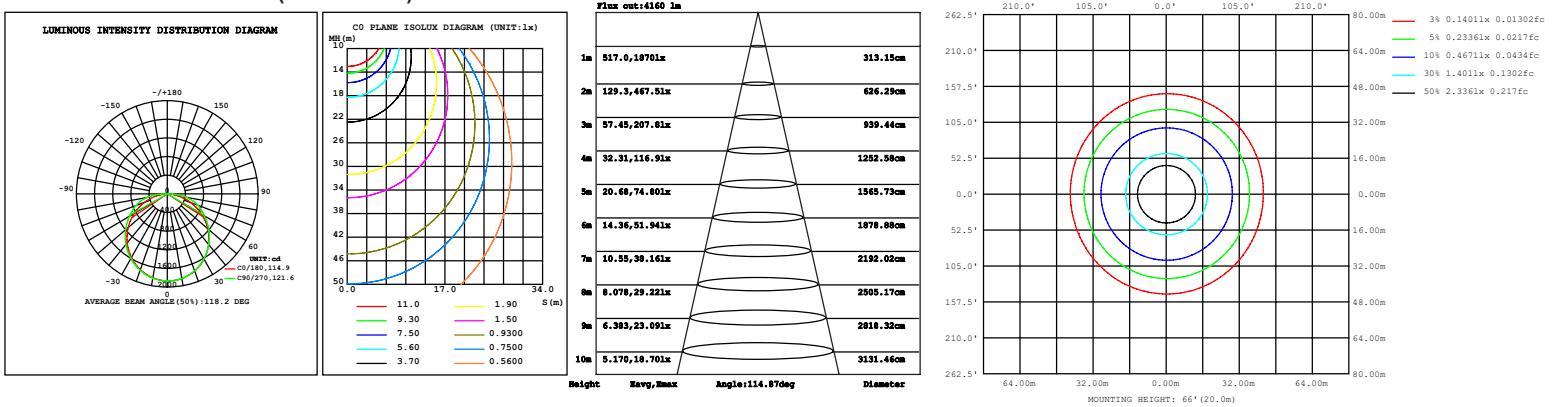

Sensor Based LED TROFFER LIGHT

WSD LED INC
Green Lighting Resources

Wattages: 14W,17W,20W,28W ; 20W,28W,34W,41W



NLC-BT-PIR-SR-001
Plug and Play Network BLE Nodes and Sensor

The NLC-BT-PIR-SR-001 uses PIR motion detectorarchitecture and passive infrared (PIR) technology for improved detection coverage for high bay applications.

FEATURES

- Bluetooth to O-1OV signal converter, Bluetooth mesh network.
- Built-in 20mA O-1OV signal output.
- Mesh network, which has a much longer control distance, transmits received signals to neighboring devices.
- All devices on O-1OV line are broadcastcontrolled by mobile application
- In typical outdoor environment, the typical range for wireless communication is 60m.
- Actual range is dependent on field installation.
- Available with Magnetic reset (Touch the top part of sensorfor 5 seconds).
- On-board antenna.

DIMENSION

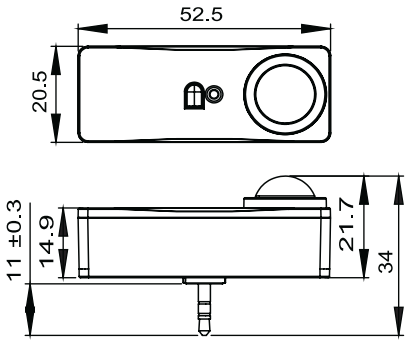

COVERAGE

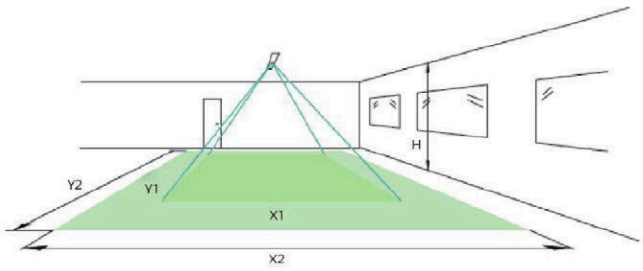



Height	Minor Movement		Major Movement	
H	Y1	X1	Y2	X2
8'/2.4m	10'/2.9m	9'/2.7m	15'/4.5m	9'/2.9m
10'/3m	12'/3.6m	11'/3.4m	18'/5.4m	12'/3.6m

Note: Longer dimension of detection area (Y1, Y2) is parallel to longer dimension.

SPECIFICATION	
NETWORK BLE MESH	Yes
DAYLIGHT HARVESTING	Yes
MICROWAVE MOTION SENSOR	Yes
MOTION SENSOR	Passive infrared sensor
OPERATING VOLTAGE	10-14V DC
OPERATING CURRENT	>50mA
SINKING CURRENT	max. 25mA
CONTROL OUTPUT	0-10V
RADIO FREQUENCY	2.4GHz ± 75MHz
DETECTION ANGLE	360 °
PRORGRAMMING	Silvair iOS App (IOS or Android)
CYBERSECURITY	UL
MOUNTING HEIGHT	12ft Max.
MAX BLUETOOTH RANGE	200ft
SAFETY	cULus Listed
FCC	FCC
OPERATING TEMP.	-20°C - +60°C
IP RATING	IP20
WARRANTY	5 year limited

COMMISSIONING

Silvair iOS App or Android makes it easy to pair devices, create groups, set scenes/schedules, customize dimming levels, and adjust high trim based on application needs.

Please scan and download the app:

Silvair App

iOS

Operation Instruction:
https://youtu.be/8KWPK7z_Tng

Android:

When using silvair, you can search for silvair in Android Google play to download and install it

Sensor Based LED TROFFER LIGHT

WSD LED INC
Green Lighting Resources

Wattages: 14W,17W,20W,28W ; 20W,28W,34W,41W

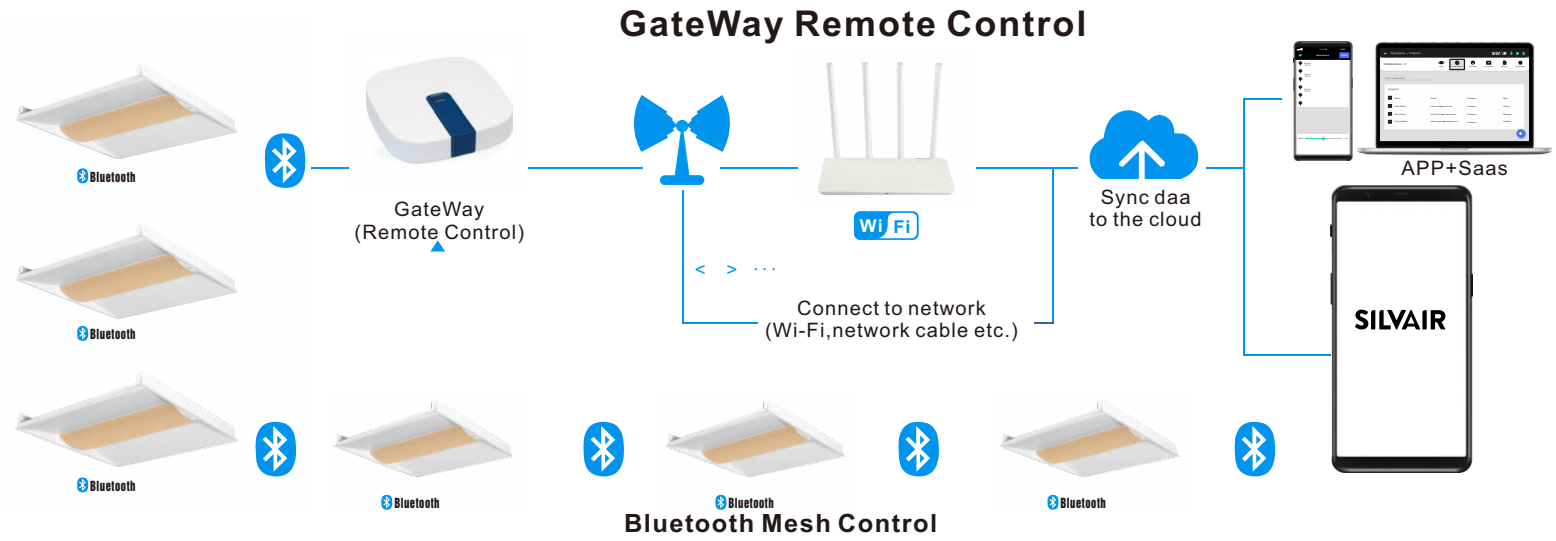



INDUSTRIAL GATEWAY

SGW-101
Smart Engineering Gateway

The Silvair Gateway connects Bluetooth mesh networks that have been commissioned using the Silvair Commissioning tools to the Silvair cloud. This allows the scheduling of events and delivery of services based on the data generated by these networks.

Functions:

The Silvair Gateway enables the following functions in the Silvair web app: ● Scheduling (available by default)
- ○Scheduling changes in scenes and lighting control scenarios (for example occupancy sensing,daylight harvesting) for specific times or days.

● Energyand occupancy monitoring (additional paid service)
- ○Visualizing energy use and occupancy via the Silvair web app.
- ○Downloading energy and occupancy via the Silvair web app and cloud-based API.

● Remote monitoring and control (additional paid service)
- ○ Low-latency monitoring of the status of devices in the network via API.
- ○ Low-latency control of devices in the network via API. ● System diagnostics
- ○ Monitoring of the status of Bluetooth mesh networks.
- ○ Remote troubleshooting of networking issues.

Features:

- ●Future-proof Linux operating system.
- ●Simple commissioning using the Silvair Commissioning tools.
- ●Automatic connection to the Silvair cloud.
- ●Secure provisioning with secure IDs and encrypted keys.
- ●High level of hardware and software security (secure boot and encrypted file system can only be accessed with the management platform).
- ●Automatic security updates.
- ●Prompt releases of OS updates and fixes to vulnerabilities.
- ●Low-latency transfer of network, luminaire, and sensor status data to the Silvair cloud.
- ●Schedule caching.
- ●Automatic remote firmware updates.
- ●Display of gateway and network performance metrics (requires the Silvair web app).

SPECIFICATION	
POWER SUPPLY	4.5–5.5 V DC, 2 A Power over Ethernet 36–57 V DC (IEEE 802.3af)
OPERATING SYSTEM	Ubuntu Core
PROCESSOR	i.MX6ULL (Y2), 32-bit ARM 800 MHz
MEMORY	512 MB DDR3L SDRAM 8GB eMMC
COMMUNICATION PROTOCOLS	Bluetooth mesh (2.4 GHz Bluetooth Low Energy) Wi-Fi 802.11a/b/g/n/ac (2.4/5 GHz) 4G LTE Cat 1 with 2G/3G (only for Cascade-500-W and Cascade-500-X gateways)
PORTS	1 x RJ45 10/100 Ethernet 1 x USB 2.0 Type-A 2 x external dipole antenna, 5 dBi (only for Cascade-500-W and Cascade-500-X gateways)
REQUIRED AMBIENT TEMPERATURE	0°C to 60°C 32°F to 140°F
ENCLOSURE DIMENSIONS	127 mm x 127 mm x 30 mm (5 inch x 5 inch x 1.2 inch)
MOUNTING POSITION	Wall or surface mounted. As close to the geometrical center of the lighting network as possible, but as far as possible from potential sources of interference.
SECURITY	Secure boot with encrypted operating system Secure communication with the Silvair Cloud over Internet (TLS) Secure communication with devices over qualified Bluetooth mesh