Installation Instruction

Grid Suspension Mount

POWER FEED

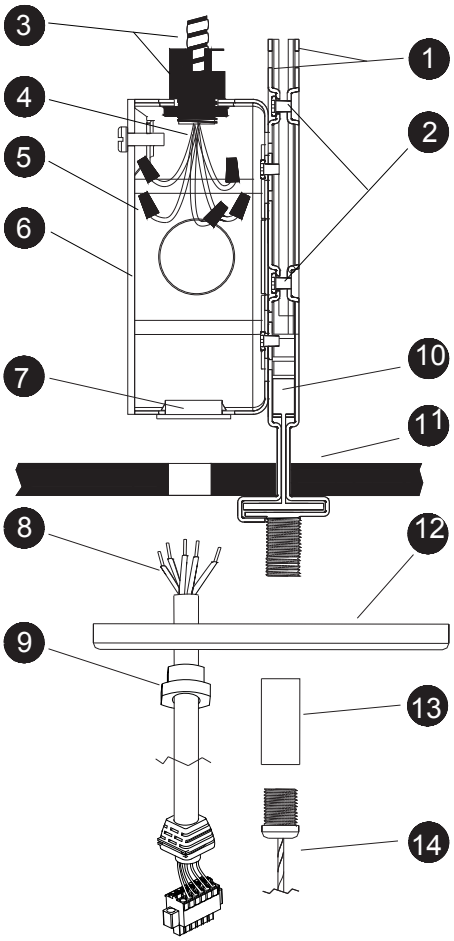

NON-FEED SUSPENSION

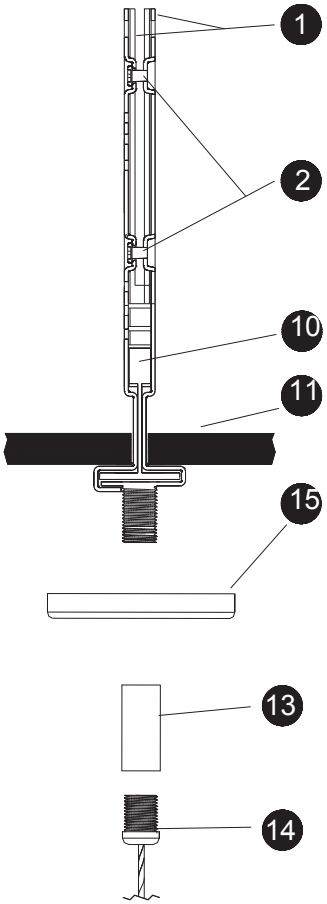

PARTS LIST

1. Assembled T-grid Clips
2. Clip Screws
3. Armored Cable (By Others)
4. Power Cord (By Others)
5. Wire Nut (By Others)
6. 4" Octogon Junction Box (By Others)
7. Plastic Grommet (By Others)
8. Power Cord
9. Bushing
10. T-grid (By Others)
11. Ceiling Tile (By Others)
12. Power Feed Canopy
13. Threaded Sleeve M10
14. Aircraft Cable
15. Non-Feed Canopy
16. Connection plate kit

Notice: Always turn off the power supply from main circuit breaker first!

Assembled T-grid Clips, x2

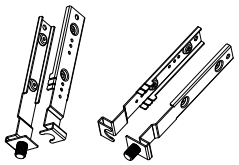

1

Clip Screws, x4

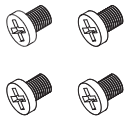

2

Bushing, x1



9

Power Feed Canopy, x1

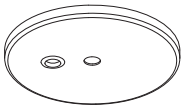

12

Threaded Sleeve M10, x2

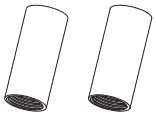

13

Aircraft Cable, x2

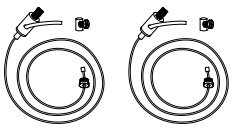

14

Non-Feed Canopy , x2



15

Connection plate kit, x2

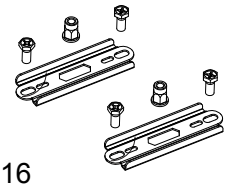

16