Junction box mounting

Installation Guide

1). Install and secure the junction box and waterproof foam as shown in the figure.

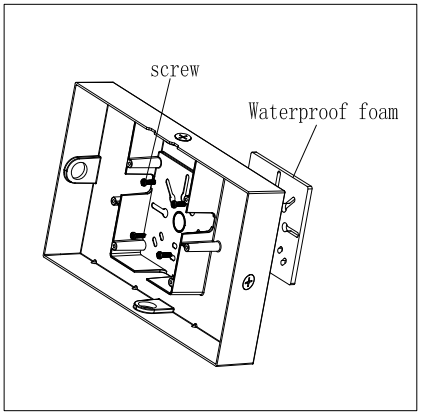

2).As shown in the figure, fix the mounting plate and the lamp mounting plate on the junction box in turn, and then hang the lamp hook on the mounting plate.

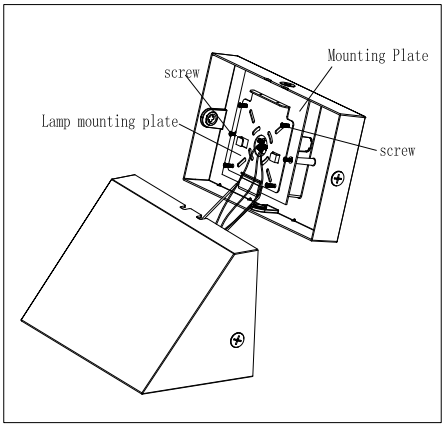

3). As shown in the figure, after the lamp screws are locked and fixed, the bottom box and the wall are sealed and waterproof with waterproof glue .

