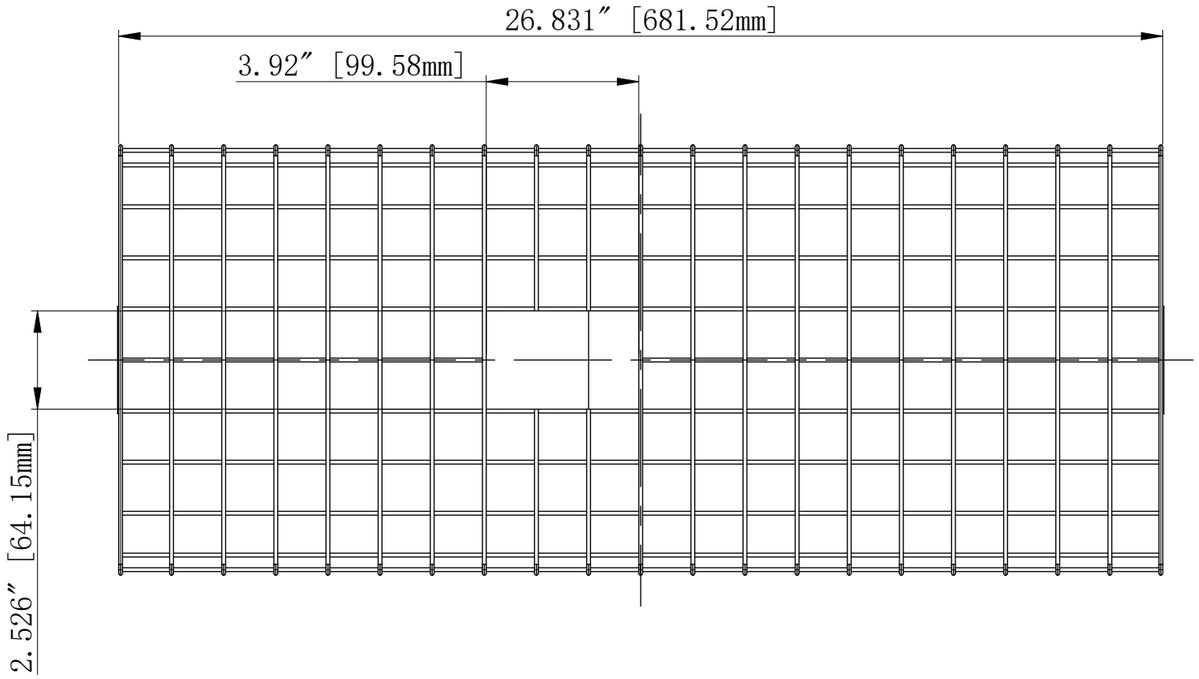

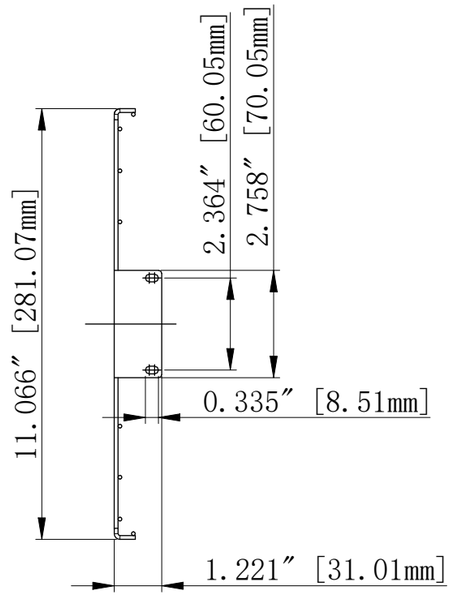

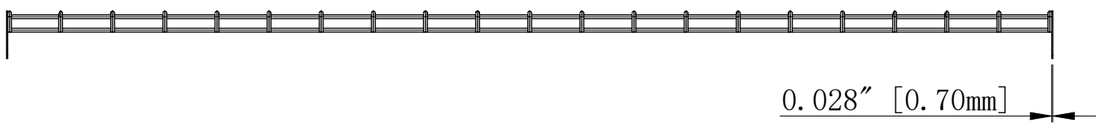

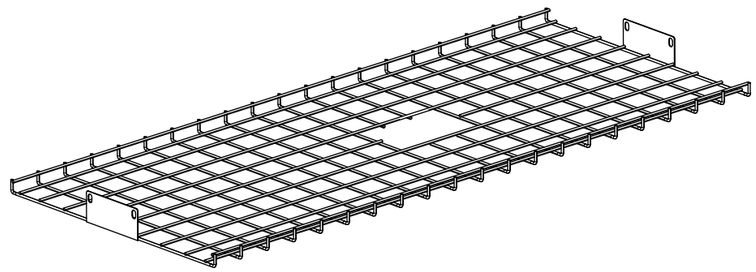

WSD®

WSD LED INC

Green Lighting Resources

			edition	Modifier	Time of modification	Repair the interior		
Material No.	305.0029	Edition	A/0	Page 1/1	Tolerance requirements:(tolerance without special requirements)			Date
Material Name	WSD-LHB-300W-WG-W	proportion	1:4	Angle	NO ±0.2 .x ±0.1 .xx ±0.05 .xxx±0.015	mapping		
Specification Description		unit				check		
Drawing Number		material quality				examine and verify		