Bluetooth Microwave Fixture Sensor

SPECIFICATION

The ANT-5-4T-BLE-SR uses microwave motion detector architecture technology for improved detection coverage for high bay applications.



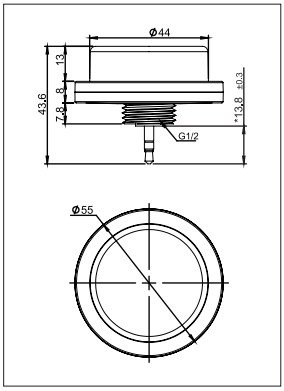

OVERVIEW

- Microwave sensor.
- Bluetooth® SIG mesh.
- High-End Trim, Zoning, Continuous Bi-level Dimming.
- LED Motion indicator.
- Mounting height up to 40 ft .
- 360° coverage pattern.
- Low Voltage connector.
- Technology Partner SILVAIR.

FEATURES AND BENEFITS

- Bluetooth to 0-10V signal converter, Bluetooth® mesh network.
- Built-in 20mA 0-10V signal output.
- Mesh network, which has a much longer control distance, transmits received signals to neighboring devices.
- All devices on 0-10V line are broadcast controlled by mobile application.
- In typical outdoor environment, the typical range for wireless communication is 60m.
- Actual range is dependent on field installation.
- Available with Magnetic reset (Touch the top part of sensor for 5 seconds).
- On-board antenna.

TECHNICAL DATA

Motion Sensor	Microwave sensor
Input Power	12-24VDC,>50mA
Control Output	0-10V,max 25mA sinking current
HF System	5.8GHz±75MHz
Transmission power	<0.2mW
Mounting height	40ft(12m) Max.
Detection angle	360°
Operating temperature	-40°F ~ +158°F (-40°C ~ +70°C)
IP rating	65
Max Bluetooth Range	200ft
Warranty	5years

SENSOR COVERAGE

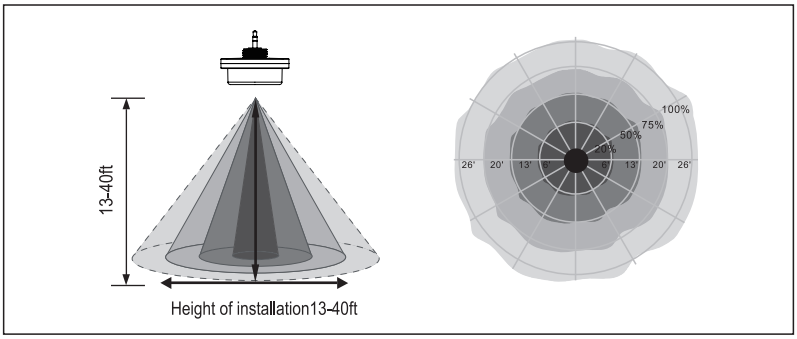

ORDERING INFORMATION

ANT-5-4T-BLE-SR Bluetooth Microwave Fixture Sensor

Download on the App Store

google play