Installation Instruction

⚠ WARNING

- To reduce the risk of death, personal injury or property damage from fire, electric shock, falling parts, cuts/abrasions, and other hazards read all warnings and instructions included with and on the fixture box and all fixture labels.
- Before installing, servicing, or performing routine maintenance upon this equipment, follow these general precautions.
- Commercial installation, service and maintenance of luminaires should be performed by a qualified licensed electrician.
- For the installation: If you are unsure about the installation or maintenance of the luminaires, consult a qualified licensed electrician and check your local electrical code.
- To prevent wiring damage or abrasion, do not expose wiring to edges of sheet metal or other sharp objects.
- Do not make or alter any open holes in an enclosure of wiring or electrical components during kit installation.

⚠ WARNING

- Turn off electrical power at fuse or circuit breaker box before wiring fixture to the power supply.
- Turn off the power when you perform any maintenance.
- Verify that supply voltage is correct by comparing it with the luminaire label information.
- All wiring connections should be capped with UL approved wire connectors.

⚠ CAUTION

- Avoid direct eye exposure to the light source while it is on.
- Account for small parts and destroy packing material, as these may be hazardous to children.
- Risk of burn. Disconnect power and allow fixture to cool before changing bulb or handing fixture.

NOTICE: Green ground screw provided in proper location.Do not relocate.
NOTICE: Minimum 90° supply conductors.
NOTICE: Specifications and dimensions subject to change without notice.
NOTICE: Suitable for Dry or Damp location.

General Wiring Diagram

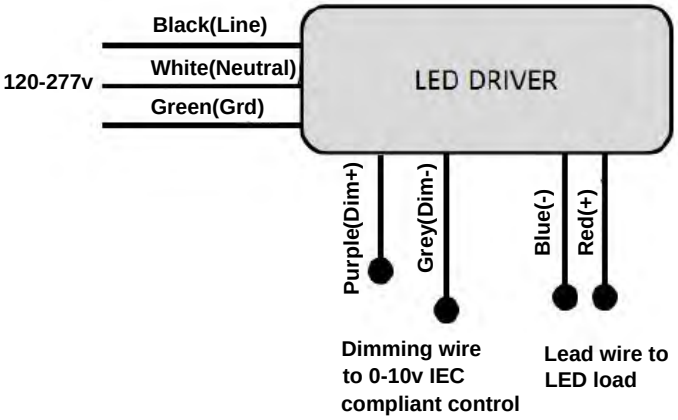

Installation Instruction

A: Cable Kit

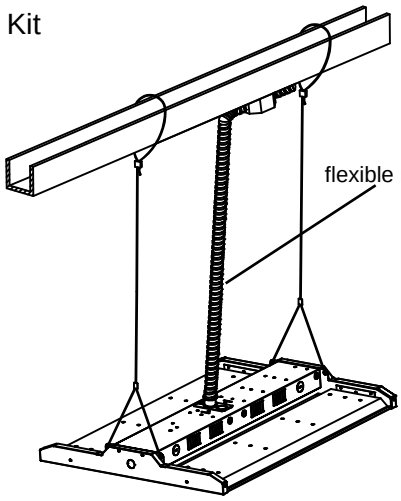

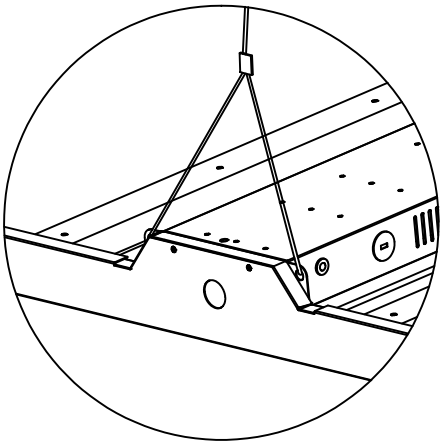

B: Chain Kit

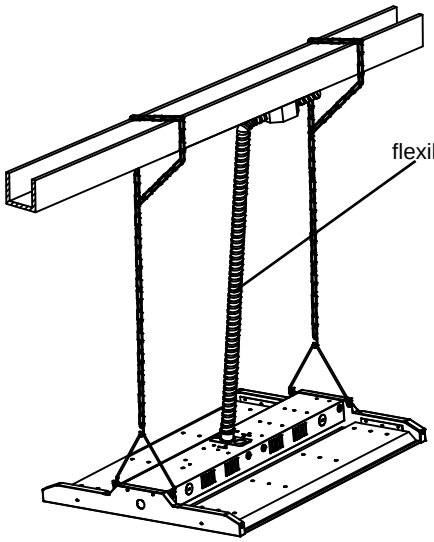

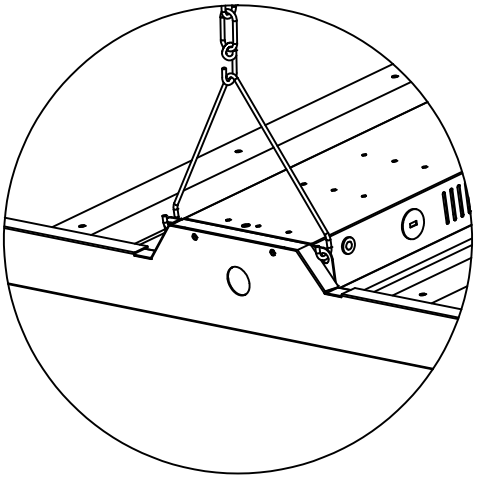

C: Wire Guards

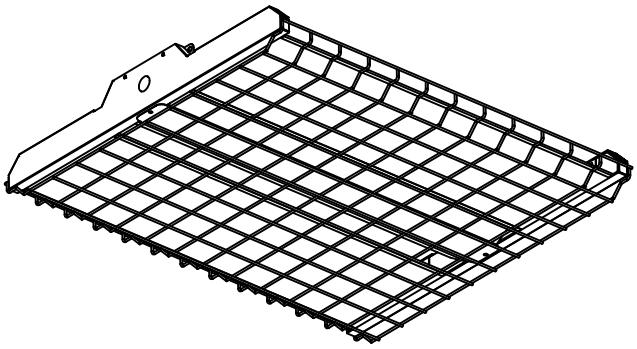

Installation Instruction

D: Surface Mounting

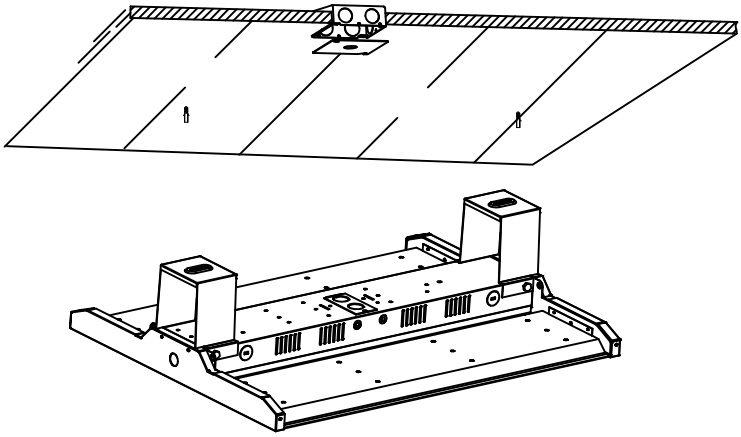

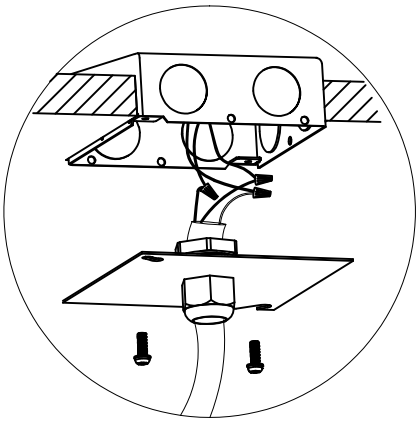

E: Pendant Hanger

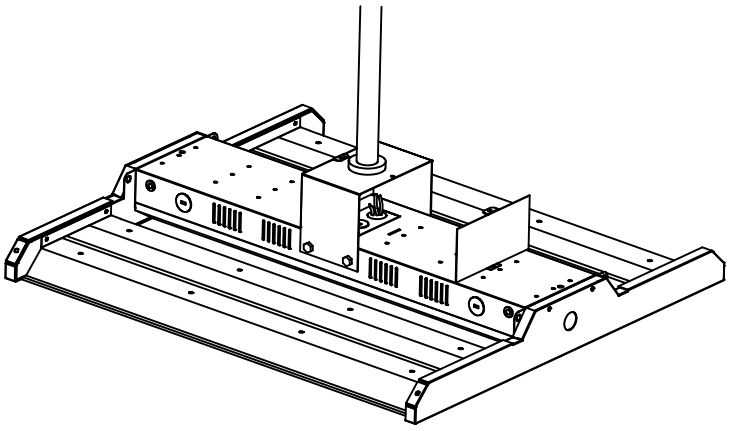

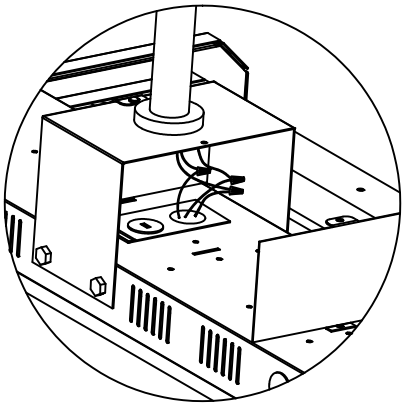

Installation Instruction

Field-Adjustable CCT

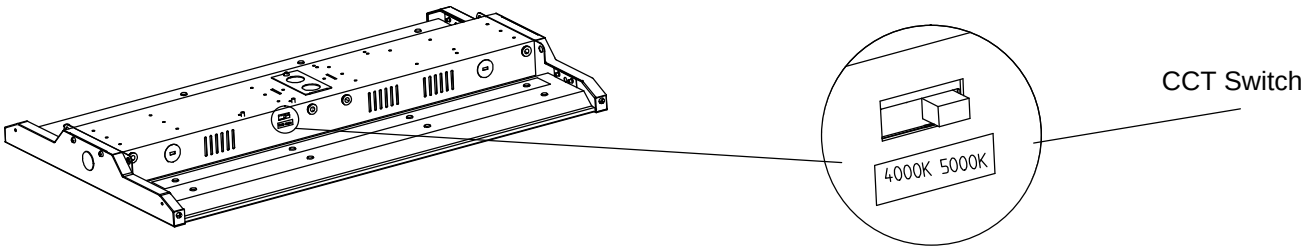

The end users may adjust the color temperature by the DIP switch buttons integrated into the driver. The DIP switch is accommodated with 2 options (left and right),corresponding to 2 color temperatures , which can perform the desired color temperatures.

Factory Setting:5000K

1.DIP switch is located onto the side of the fixture.

2.Select acolor temperature by sliding switch left or right to the desired value.

Installation Instruction

F: Microwave Motion sensor Mounting ANT-5-4T/BluetoothSensor ANT-5-4T-BLE.PIR Sensor ANT-6-4T for options. Please contact manufacture for more information.

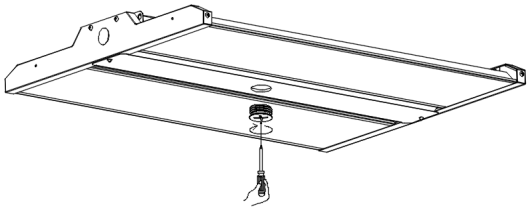

1. As shown in the picture, turn counterclockwise to unscrew the plug.

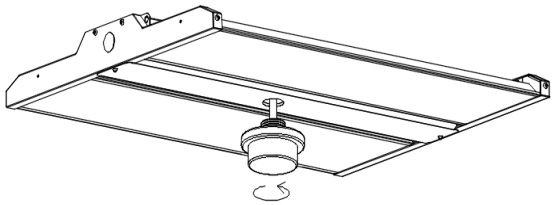

2. Insert the microwave sensor into the hole and tighten it clockwise.

General Wiring Diagram

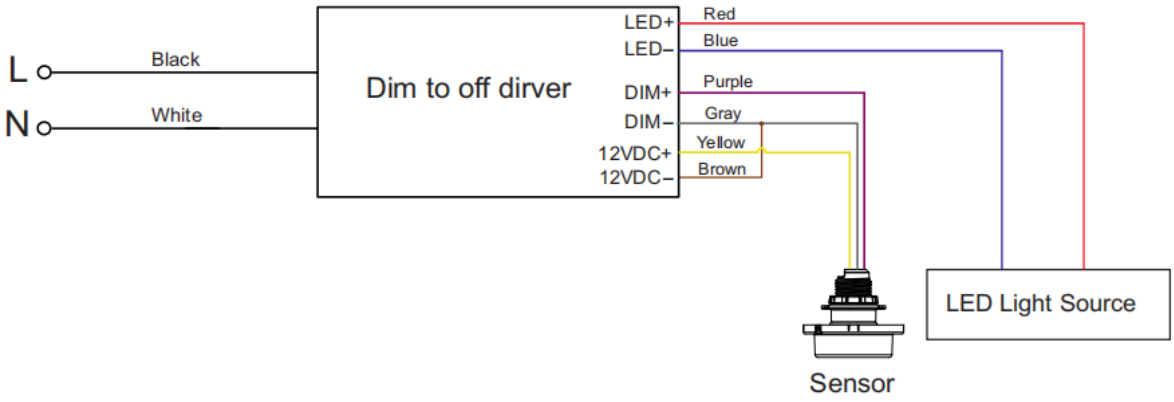

Installation Step:

Always turn off the power supply from main circuit breaker first!

- Remove the new LED fixture from packaging and inspect for any damages. Handle new LED fixture with care.
- CHAIN MOUNT EXAMPLE; Install the chain into the provided wire hanger. Secure the other end of the chain to a structure using hardware rated for the load.Install the wire hanger onto the side of the top ETLB6 LED channel. Make sure the wiring hangers are fully engaged into the side holes on the top channel.
- Connect the LED high bay wiring to line wire, black to black, white to white and green to green. Use only UL listed wiring. **NOTE: Purple and grey lead inside the driver compartment are 0-10V (low voltage) dimming leads. Connect to dimming low voltage wiring only.
- Clean all residues/fingerprints from the new LED high bay and lens. Double check all hanging hardware before moving onto the next installation.

Installation Instruction

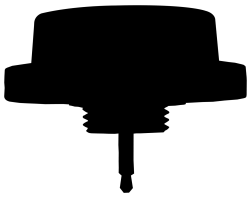

ANT-5-4T



RC-100

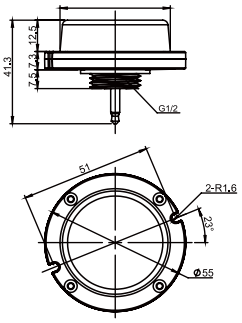

INTRODUCTION

The ANT-5-4T is a motion sensor that dims lighting from high to low based on movement. This slim, low-profile sensor is designed for installation inside the bottom of a light fixture body.
The sensors use microwave sensing technology that reacts to changes in movement within the coverage area. Once the sensor stops detecting movement and the time delay elapses lights will go from high to low mode and eventually to an OFF position if it is desired. Sensors must directly "see" motion of a person or moving object to detect them, so careful consideration must be given to sensor luminaire placement and lens selection. Avoid placing the sensor where obstructions may block the sensor's line of sight.

SPECIFICATIONS

Power supply	12V–24V DC, >50mA
Dim control output	0-10V, max. 25mA sinking current
HF System	5.8GHz±75MHz
Transmission power	<0.2mW
Detection radius	20%/50%/75%/100%(1-8m)
Mounting height	Max 40ft.(12meters)
Time setting	10s/1min/5min/10min/15min/20min/30min/60min
Light-control	24H/10LUX/30LUX/50LUX
Temperature	-40°F ~ +158°F (-40°C ~ +70°C)
IP rating	IP65

⚠ WARNING

NOTE: Warm up time is 15seconds. After the sensor connects input power first time, the light will keep on 15seconds, then go to dimming to work normally.
NOTE: Factory Default Setting: 100% sensitivity, Hold on time: 5min, Daylight sensor is ☼, Dimming level: 30%,Dimming time: 60minitues.
NOTE: Any setting changed by remote control, the led light that sensor connect will on/off as confirm.

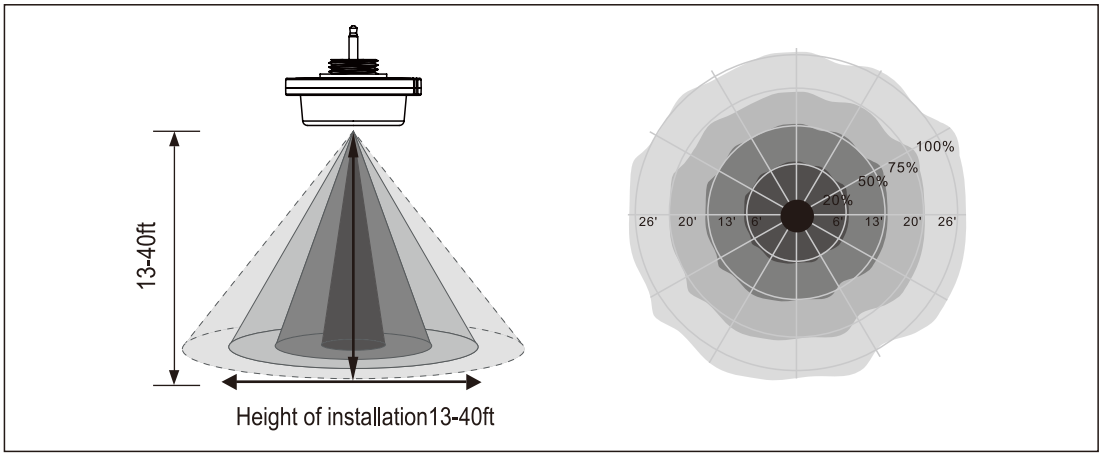

Installation Instruction

RC-100
Sensor Remote Programmer
OPERATION INSTRUCTIONS

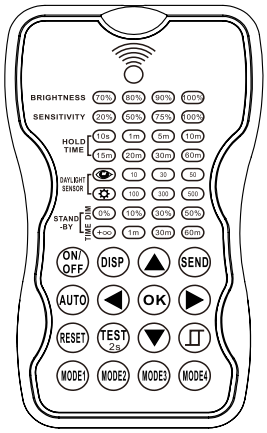


REMOTE
with carrying case

SPECIFICATIONS

Power supply	2 x AAA 1.5V battery, Alkaline preferred
Carrying case	RC-100 in carrying case
Upload range	Up to 15 m (50 ft.)
Op. temperature	0°C~50°C (32°F~122°F)
Dimensions	123 x 70 x 20.3 mm (4.84″ x 2.76″ x 0.8″)

⚠ WARNING

Remove the batteries from compartment if the remote will not be used in 30 days.

OVERVIEW

The remote control Wireless IR Configuration Tool is a handheld tool for remote configuration of IR-enabled fixture integrated sensors. The tool enables device to modify via pushbutton without ladders or tools, and stores up to four sensor parameter modes to speed configuration of multiple sensors.

The remote control uses bidirectional IR communication to send and receive sensor settings at mounting height up to 50 feet. The device can display previously established sensor parameters, copy parameters and send new parameters or store parameter profiles. For projects where identical settings may be desired across a large number of areas or spaces, this capability provides a streamlined method of configuration. Settings can be copied throughout a site, or in different sites.

LED INDICATORS

LED	DESCRIPTION	LED	DESCRIPTION
BRIGHTNESS	High end trim turning function(To Set the output level of connected lighting during occupancy)		To select the current surrounding lux value as the daylight threshold. This feature enables the fixture to function well in any real application circumstances.
SENSITIVITY	To set the occupancy sensing sensitivity of the Sensor		The daylight sensor stops working, and all motion detected could turn on the lighting fixture, no matter how bright the natural light is.
HOLD TIME	The time that the Sensor will turn off(if you choose stand-by level is 0) or dim the light to a low level after the area is vacated	STAND-BY DIM	To set the output level of connected lighting during vacancy. The sensor will regulate the lighting output at the set level. Setting the STAND-BY DIM level at 0 means light full off duringvacancy.
DAYLIGHT SENSOR	To represents various thresholds of natural light level for the Sensor .	STAND-BY TIME	To represents the time that the Sensor will keep the light at low dim level after the HOLD TIME elapsed.

Installation Instruction

BUTTON OPERATION

BUTTON	DESCRIPTION	BUTTON	DESCRIPTION
ON/OFF	Press the ON/OFF button, the light goes to permanent on or permanent off mode, and the sensor is disabled. (MUST press AUTO button to quit this mode for Setting.	AUTO	Press AUTO button, the sensor starts to function and all settings remain the same as the latest status before the light is switched on/off.
DISP	Display the current/lastest setting parameters in LED indicators(the LED indicators will on for showing the setting parameters).	TEST 2s	The button TEST 2s is for testing purpose sensitivity only. after you choose sensitivity thresholds, then you press TEST 2s button, The sensor goes to test mode(hold time is only 2s) automatically ,meanwhile the stand-by period and daylight sensor are disabled. Press AUTO button to quit from this mode.
RESET	Press RESET button, all settings go back to settings of dip Switch in sensor.		
▲ ▼	Enter in the setting condition, the parameter leds of remote control will flash to be selected. and Navigate to UP and Down for choose selected parameters in LED indicators.	◀ ▶	Navigate to LEFT and RIGHT for choose selected parameters in LED indicators.
OK	Confirm the selected parameters selected parameters in remote control.	⎍	Open and close smart daylight Sensor. Press ▲ or ▼ Enter in the setting condition, the parameter leds of remote control will flash to be selected, Press ⎍ for open or close smart daylight Sensor.
SEND	Press SEND button, upload the current parameters to sensor(s), the led light which the sensor connects will on/off as confirm.		
MODE1 MODE2 MODE3 MODE4	4 Scene modes with preset parameters which are available to be changed and saved in modes.		

SETTING

The SETTING Content contains all available settings and parameters for remote sensors. It allows you to change the available control, parameters, and operation of the sensor from factory default or current parameters.

Change multiple settings of sensor(s)

1.Press DISP button, the remote control leds will show the latest parameters you set.

NOTE: if you push ON/OFF button before, you must push AUTO button to unlock the sensor.

2.Press ▲ or ▼ enter in the setting condition, the parameter leds of remote control will flash to be selected, navigate to the desired setting by pressing ▲ ▼ ◀ ▶ to select the new parameters.

3.Press ok to confirm all setting and saving.

4.Aim at the target sensor and press to upload the new parameter, the led light which the sensor connects will on/off as confirm.

NOTE: the setting works key step is by Push ▲ or ▼, enter in the setting condition.

NOTE: the led light which the sensor connects will on/off after getting the new parameter as confirm.

NOTE: If you press DISP button, the remote led indicators will show the latest parameters which were sent.

Installation Instruction

Change multiple setting of sensors with smart photocell sensor Open

1.Press (DISP) , the remote led indicators will show the latest parameters.
2.Press (▲) or (▼) enter in the setting condition, the parameter Led indicators of remote control will flash to be selected.
3.Press (⎍),2 led indicators will flash in daylight sensor settings ,select daylight (10) (30) (50) as setpoint to light on Automatically , select daylight (100) (300) (500) as setpoint to light off Automatically.
4.Press (OK) to confirm all setting and saving.
5.Aim at the target sensor and press (SEND) to upload the new parameter. The led light which the sensor connects will on/off.

NOTE: (⎍) is disabled by default.
1.Open or close the smart daylight sensor by push (⎍) when remote control is in setting condition.
2.When the smart daylight sensor open, 2 Led indicators are flash in daylight sensor setting. select daylight (10) (30) (50) as setpoint to light on Automatically , select daylight (100) (300) (500) as setpoint to light off automatically.When smart daylight sensor close, 1 Led indicator is flash in the daylight sensor setting for choose daylight sensor threshold.
3.When the smart daylight sensor open, the stand-by time is only (+∞) .
4.Smart daylight sensor takes place of normal photocell senor and works independently.
5.See **Daylight Sensor Function**.

Corridor Function

This function inside the motion sensor to achieve tri-level control, for some areas which require a light change notice before switch-off. The sensor offers 3 levels of light: 100%-->dimmed light (natural light is insufficient) -->off; and 2 periods of selectable waiting time: motion hold-time and stand-by period; Selectable daylight threshold and freedom of detection area.

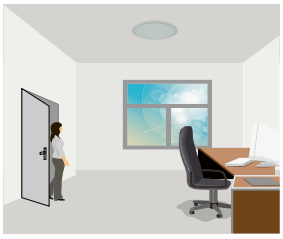

With suffcient natural light, the light does not switch on when presence is detected.

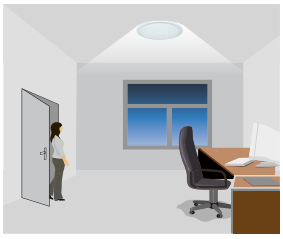

With insufficient natural light, the sensor switches on the light automatically when presence is detected.

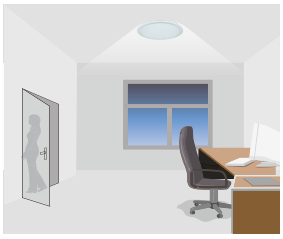

After hold-time, the light dims to stand-by level if the surrounding natural light is below the daylight threshold.



Light switches off automatically after the stand-by period elapses.

Daylight Sensor Function

Open the daylight sensor by push (⎍) when remote control is in setting condition.



The light switches on at 100% when there is movement detected.

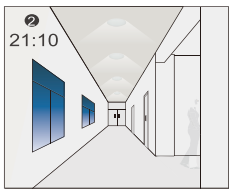

The light dims to stand-by level after the hold-time.

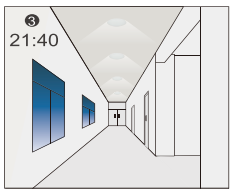

The light remains in dimming level at night.

Settings on this demonstration:
Hold-time: 30min
setpoint to light on:50lux
setpoint to light off:300lux
Stand-by Dim: 10%
Stand-by period: +∞
(when the smart photocell sensor open, the stand-by time is only +∞)

Installation Instruction

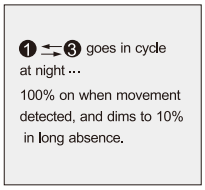

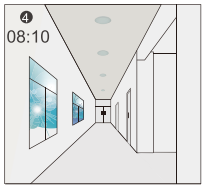

When the natural light level exceeds setpoint off to light,the light will turn off even if when the space is occupied.

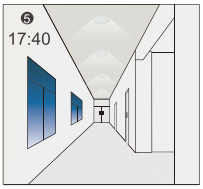

The light automatically turns on at 10% when natural light is insuffcient (no motion).

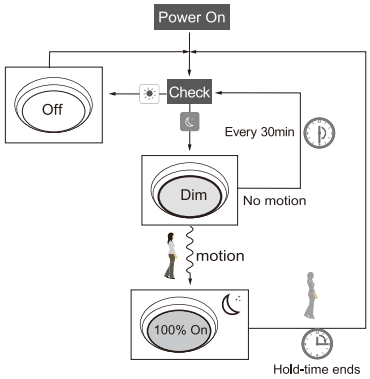

Corridor Function VS Daylight Sensor Function.

1.In corridor function, turn on the light MUST by natural light level lower daylight sensor setting and Occupancy. In smart daylight sensor function, turn on the light by natural light level lower daylight setpoint to light on even if vacancy.

2.In corridor function, turn off light by stand-by time finish if vacancy. In smart daylight sensor function, turn off the light by natural light level higher than daylight setpoint to light off even if occupancy.

3.In smart daylight sensor function, natural light level lighter/lower than daylight setpoint to light off/on MUST keep at least 1mintue,that will turn off/on the light automatically.

About RESET and MODE(1,2,3,4)

The remote control comes with 4 Scene MODES which are not default. You may make desired parameters and save as the new MODE(1,2,3,4) to configure the installed sensors.

RESET: all settings go back to settings of DIP Switch in sensor.

SCENE MODES(1 2 3 4)

Application	Scene Options	Brightness	Detection Area	Hold Time	Stand-by Time	Stand-by Dim Level	Daylight Sensor
Indoor	Mode 1	100%	75%	5min	30min	30%	☼
Indoor	Mode 2	100%	75%	1min	+∞	30%	☼
Indoor	Mode 3	100%	75%	5min	30min	30%	30LUX
Outdoor	Mode 4	100%	75%	1min	+∞	30%	⎍ (30LUX/300LUX)

Change the MODES:

1.press (MODE1) / (MODE2) / (MODE3) / (MODE4) button,the remote control Led indicators show existing parameters.

2.press (▲)(▼)(◀)(▶) to select the new parameters.

3.Press (OK) to confirm all parameters and saving in the mode.

UPLOAD

The upload function allows you to configure the sensor with all parameters in one operation. You may select CURRENT SETTING parameters or the MODE for uploading. Current setting parameters or the MODE are displayed in Remote control .

Upload the current parameters to sensor(s),and duplicate the sensor parameters form one to anther

1.Press (DISP) button or press (MODE1)/ (MODE2)/ (MODE3)/ (MODE4), all parameters are displayed in Remote control.

Note: check if all parameters are correct , if not, change them.

2.Aim at the sensor and press (SEND) button , the light that sensor connects will be on/off as confirm.

Note: if other sensor need same parameters, just aim at the sensor and press (SEND) button.