Installation Instruction

⚠ WARNING

- To reduce the risk of death, personal injury or property damage from fire, electric shock, falling parts, cuts/abrasions, and other hazards read all warnings and instructions included with and on the fixture box and all fixture labels.
- Before installing, servicing, or performing routine maintenance upon this equipment, follow these general precautions.
- Commercial installation, service and maintenance of luminaires should be performed by a qualified licensed electrician.
- For the installation: If you are unsure about the installation or maintenance of the luminaires, consult a qualified licensed electrician and check your local electrical code.
- To prevent wiring damage or abrasion, do not expose wiring to edges of sheet metal or other sharp objects.
- Do not make or alter any open holes in an enclosure of wiring or electrical components during kit installation.

⚠ WARNING

- Turn off electrical power at fuse or circuit breaker box before wiring fixture to the power supply.
- Turn off the power when you perform any maintenance.
- Verify that supply voltage is correct by comparing it with the luminaire label information.
- All wiring connections should be capped with UL approved wire connectors.

⚠ CAUTION

- Avoid direct eye exposure to the light source while it is on.
- Account for small parts and destroy packing material, as these may be hazardous to children.
- Risk of burn. Disconnect power and allow fixture to cool befor changing bulb or handing fixture.

NOTICE: Green ground screw provided in proper location.Do not relocate.
NOTICE: Minimum 90° supply conductors.
NOTICE: Specifications and dimensions subject to change without notice.
NOTICE: Suitable for Dry or Damp location, Type IC

General Wiring Diagram

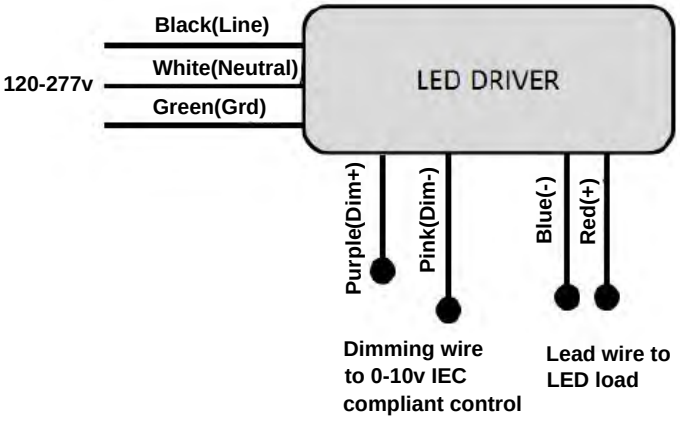

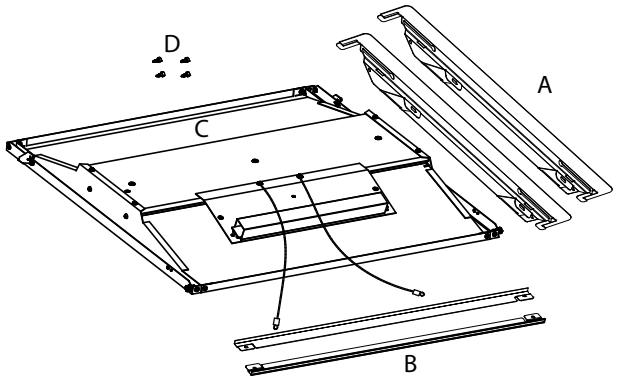

A: End Plates	2pcs
B: Side Plates	2pcs
C:Door Assembly body	1pc
D:Self-tapping screws	4pcs

Installation Instruction

NOTICE:

The existing fluorescent luminaries housing shall be larger than dimensions described in below table:

Housing Designation	Overall inner Dimensions
2' x 2'	610 mm by 608 mm by 78 mm high
2' x 4'	1220 mm by 608 mm by 78 mm high
1' x 4'	1220 mm by 305 mm by 100 mm high

Installation

Figure 1

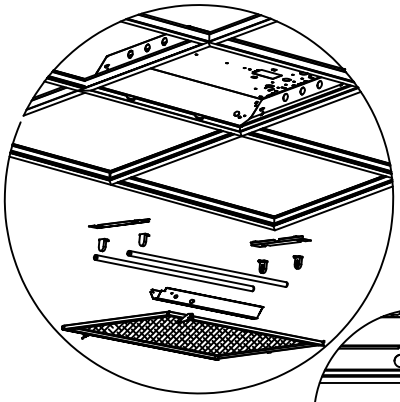

Figure 2

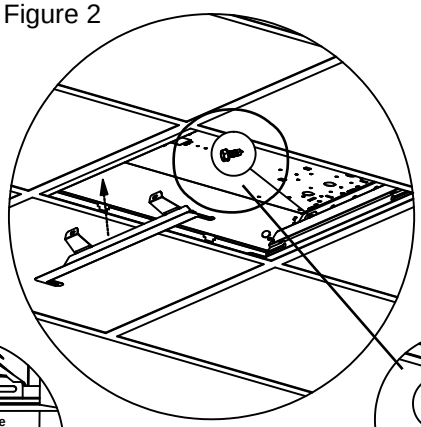

Figure 3

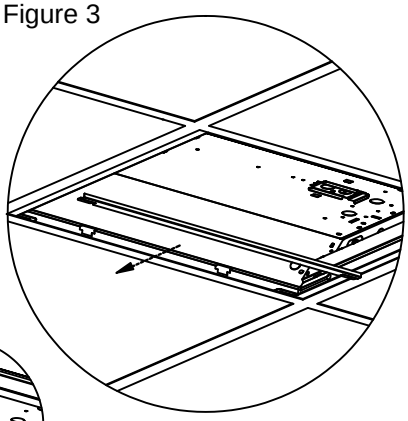

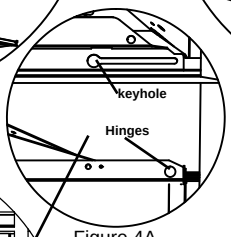

Figure 4A

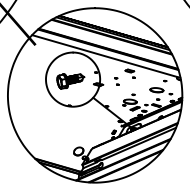

Figure 2A

Figure 4

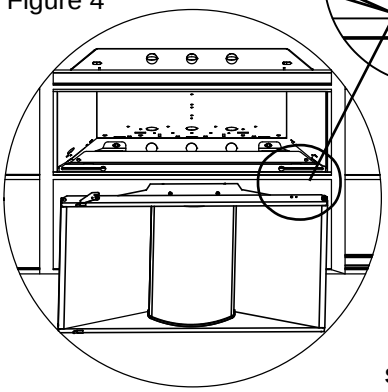

Figure 5

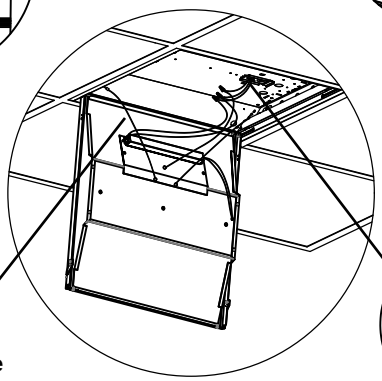

Figure 6

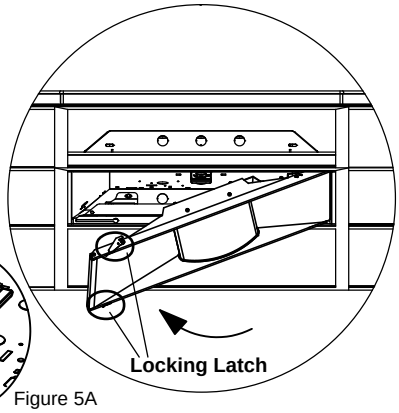

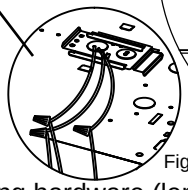

Figure 5A

- Prior to installation, disconnect all incoming power to fixture. Remove existing hardware (lens/lens frame, parabolic louver, reflectors/ballast covers, brackets, lamps/lamp holders).Leave supply and grounding leads.(Fig.1)

  NOTE: Follow all federal and local regulations when disposing of lamps and removed components.
- Install LED panel end brackets to each end of the existing fixture by gently lifting it and placing LED panel end brackets between the fixture and T-grid.
- If you are not pleased with the gap between the fixture and T-grid, you may install LED panel side brackets between the fixture and T-grid, there are two tabs to allow for placing the side brackets into the slot of end brackets. (Fig.2)
- Secure the LED panel brackets to the existing fixture using the provided #8x1/2” self-drilling screws. (Fig.3)
- Locate the door assembly body onto the keyholes of end brackets, and then slide the door assembly body horizontally to the end of slots. (Fig.4)
- Hook the safety cables into the holes positioned the end brackets.
- Use the provided wire caps to connect the wire leads of the troffer kits to the main power leads. (Black-Live, White-Neutral, Green-Grounding) (Fig.5)
- Secure the door assembly body by lock the latches riveted on each end of the assembled door frame. (Fig.6)

Installation Instruction

Field-Adjustable Wattage & CCT

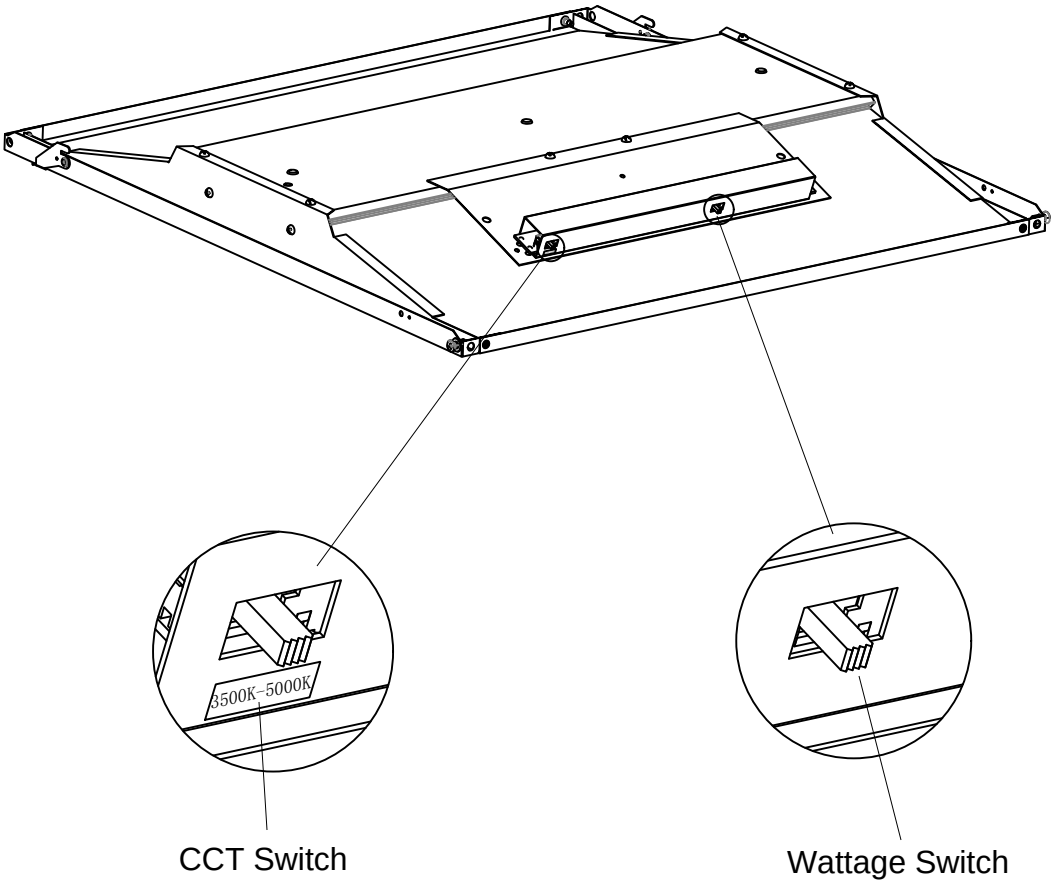

The end users may adjust the color temperature and lumen output respectively by the two DIP switch.Each DIP switch is accommodated with 3 options (left, middle and right),corresponding to 3 color temperatures and 3 powers respectively, which can perform the desired color temperature and lumen output combination.

1.DIP switches are located onto the side of the fixture.

2.Select a wattage and color temperature by sliding switch left or right respectively to the desired value.