Installation Instruction

- Surface Mounting Kit

1.Using the appropriate dimensions and fasteners after properly measuring the placement of the surface mount frame.

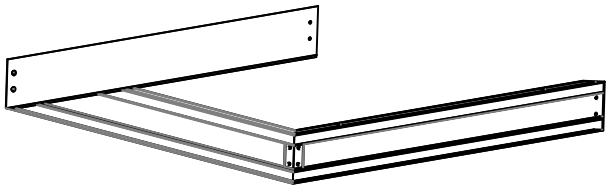

2.Choose the opening part as close as possible to the junction box prior to securing the surface mount frame to the ceiling . Enaure the frame is square,then slide horizontally till the end of slots prior to fully securing the frame to the ceiling.

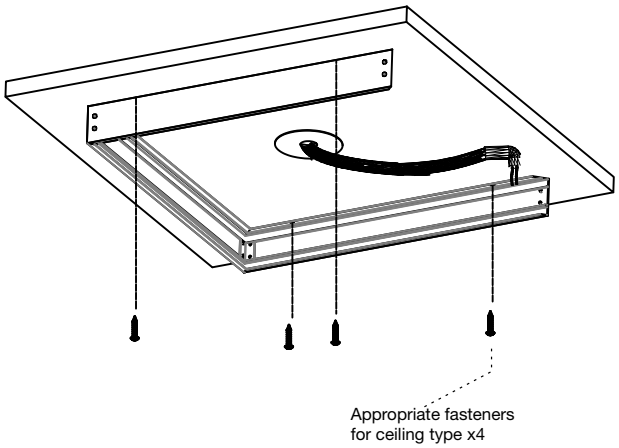

3.Put the wire conduit hose as close as possible to the surface mount opening before placing/inserting the luminaire into it partially.Make all electrical connections according to local code and make s ure wire conduit hose is long enough for wiring connection job .

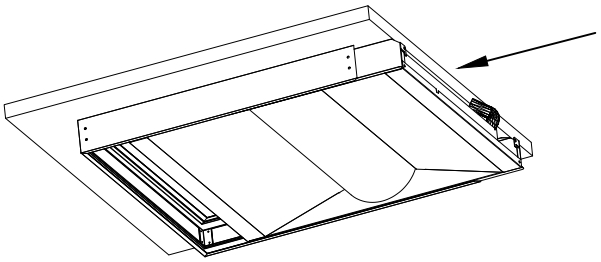

4.Push the conduit hose back into the surface mount frame properly ,insert the luminaire fully into the frame. When installed properly, the luminaire will rest on the flanges of the surface mount frames . If the luminaire is not resting properly on the flanges, lift it up and shift it until it rests into place.

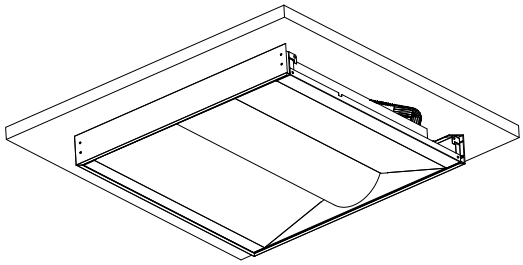

5. Place the last frame into the slots ,then slightly slide the last frame to the left , make sure it get locked tightly, join the last frame to the rested frames by fastening them together with appropriate fasteners .

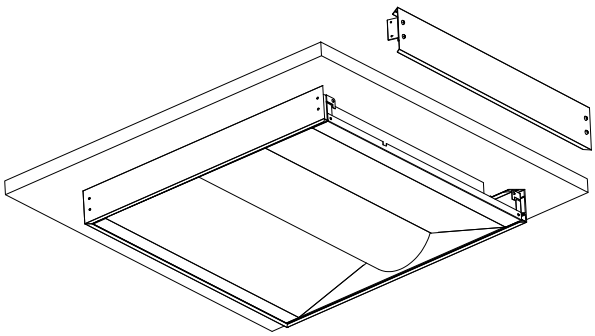

6.Installation completed. Fixture is ready to power on.

