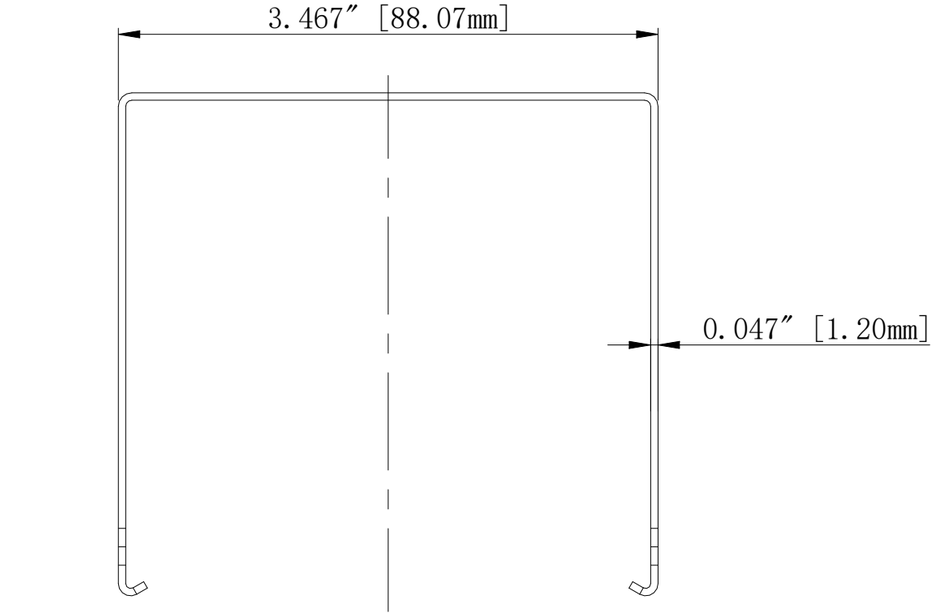

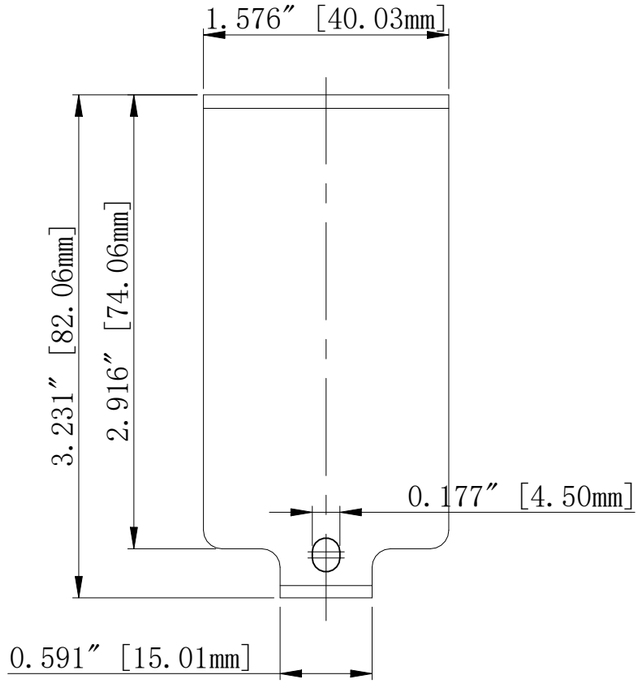

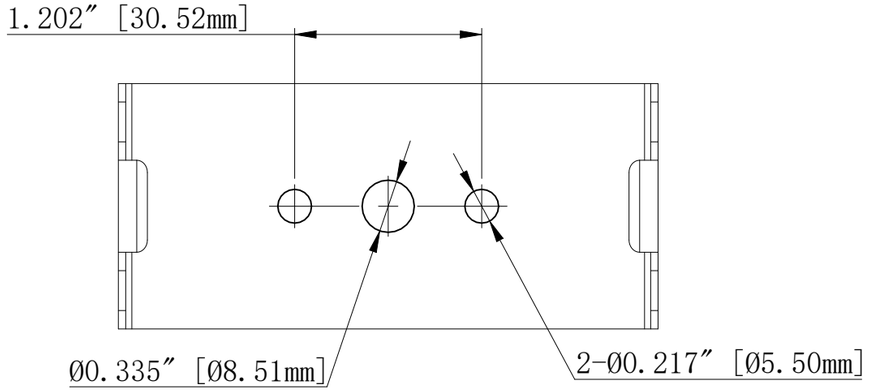

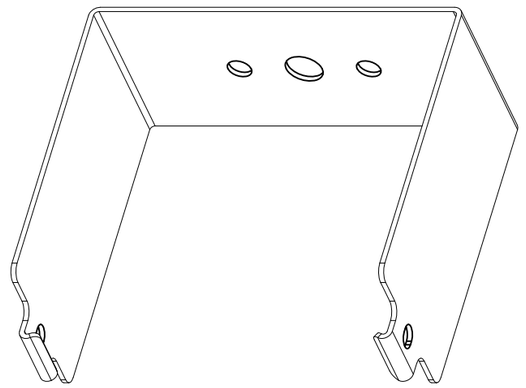

WSD LED INC Green Lighting Resources				edition	Modifier	Time of modification	Repair the interior	
Material No.	312.0794	Edition	A/0	Page 1/1	Tolerance requirements:(tolerance without special requirements)			Date
Material Name	WSD-LHB-SM	proportion	1:1	Angle	NO ±0.2 .x ±0.1 .xx ±0.05 .xxx±0.015	mapping		
Specification Description		unit				check		
Drawing Number		material quality				examine and verify		