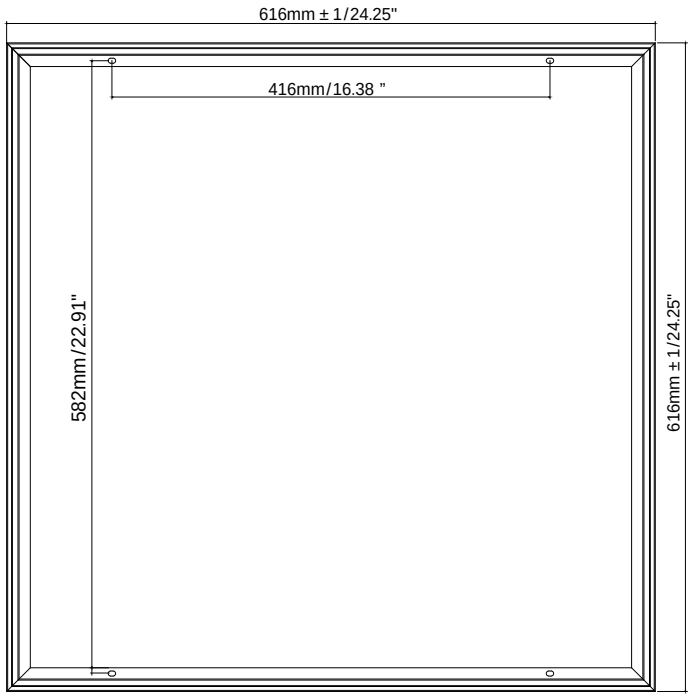

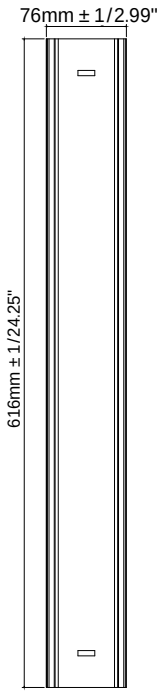

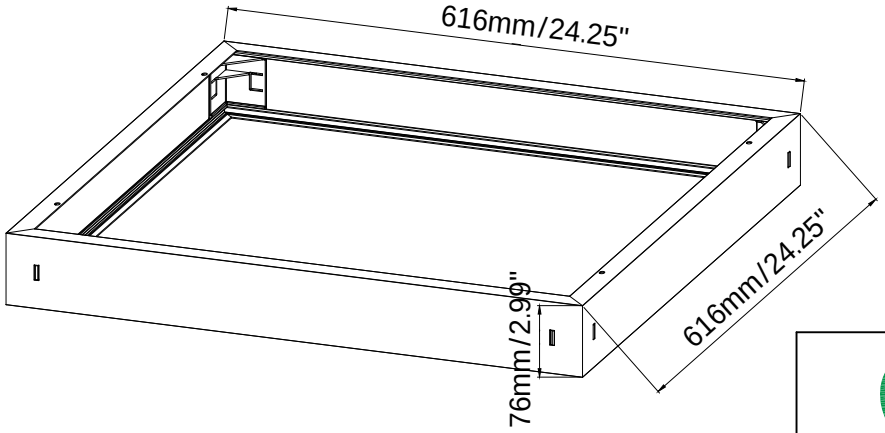

WSD LED INC Green Lighting Resources							
			edition	Modifier	Time of modification	Repair the interior	
Material No.	907.0266	Edition	A/0	Page 1/1	Tolerance requirements:(tolerance without special requirements)		Date
Material Name	WSD-PANEL2X2-KIT-G2	proportion		Angle	NO ±0.2	mapping	
Specification Description		unit			.x ±0.1	check	
Drawing Number		material quality			.xx ±0.05 .xxx±0.015	examine and verify	