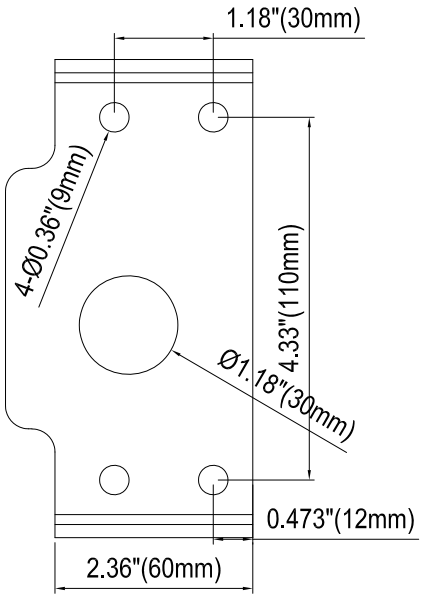

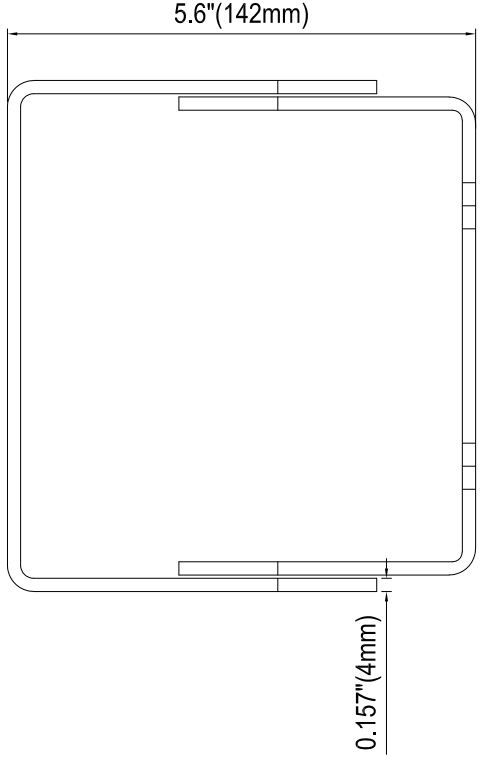

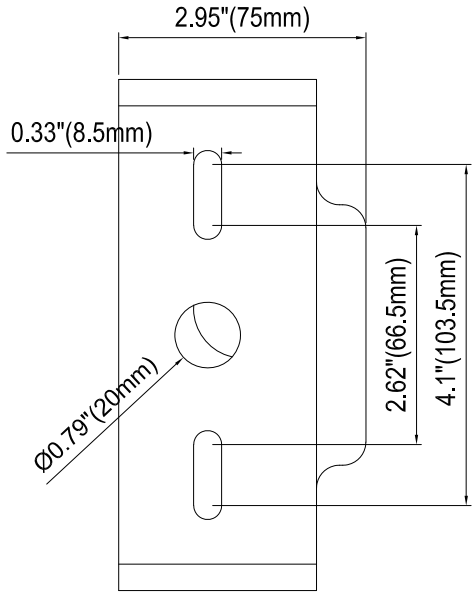

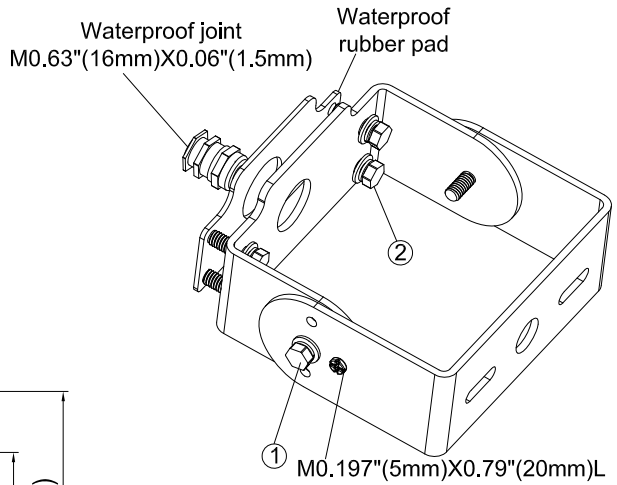

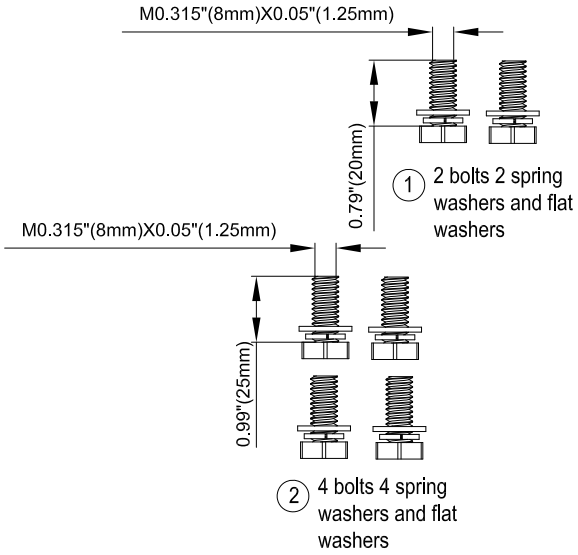

Technical requirements:
1. Material: galvanized plate

WSD LED INC Green Lighting Resources			edition	Modifier	Time of modification	Repair the interior	
Material No.		Edition	A/0	Page 1/1	Tolerance requirements:(tolerance without special requirements)		Date
Material Name	SBT	proportion		Angle	NO ± 0.2	mapping	
Specification Description		unit			.x ± 0.1 .xx ± 0.05	check	
Drawing Number		material quality			.xxx± 0.015	examine and verify	