Installation Instruction

⚠ WARNING

- To reduce the risk of death, personal injury or property damage from fire, electric shock, falling parts, cuts/abrasions, and other hazards read all warnings and instructions included with and on the fixture box and all fixture labels.
- Before installing, servicing, or performing routine maintenance upon this equipment, follow these general precautions.
- Commercial installation, service and maintenance of luminaires should be performed by a qualified licensed electrician.
- For the installation: If you are unsure about the installation or maintenance of the luminaires, consult a qualified licensed electrician and check your local electrical code.
- To prevent wiring damage or abrasion, do not expose wiring to edges of sheet metal or other sharp objects.
- Do not make or alter any open holes in an enclosure of wiring or electrical components during kit installation.

⚠ WARNING

- Turn off electrical power at fuse or circuit breaker box before wiring fixture to the power supply.
- Turn off the power when you perform any maintenance.
- Verify that supply voltage is correct by comparing it with the luminaire label information.
- All wiring connections should be capped with UL approved wire connectors.

⚠ CAUTION

- Avoid direct eye exposure to the light source while it is on.
- Account for small parts and destroy packing material, as these may be hazardous to children.
- Risk of burn. Disconnect power and allow fixture to cool before changing bulb or handing fixture.

NOTICE: Green ground screw provided in proper location.Do not relocate.
NOTICE: Minimum 90° supply conductors.
NOTICE: Specifications and dimensions subject to change without notice.
NOTICE: Suitable for Dry or Damp location

General Wiring Diagram

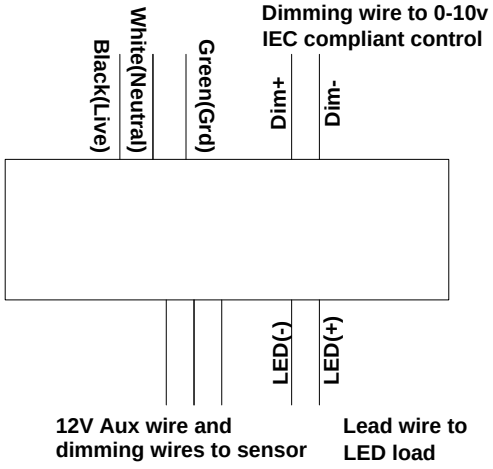

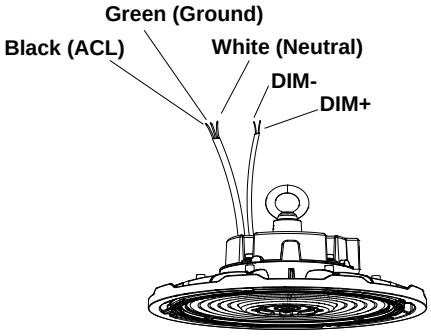

Installation Instruction

Notice: Always turn off the power supply from main circuit breaker first!

Installation Methods: Hook or Chain Mount, Pendant mount, Ceiling/Wall Mount
(Please choose the most suitable installation method for your application)

A) Hook or Chain mount (using Eyebolt)

1. Screw the eyebolt into the fxture and tighten it. (Figure 1)
2. Hang the fixture on the ceiling hook (Figure 2) or chain (Figure 3).
3. After installation, connect the wire of the fixture to the mains according to the local wiring rules.

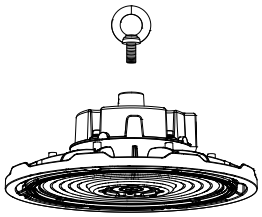

Figure 1

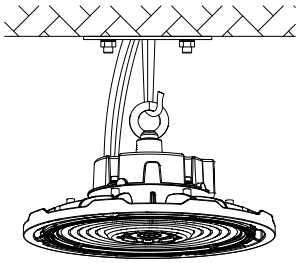

Figure 2

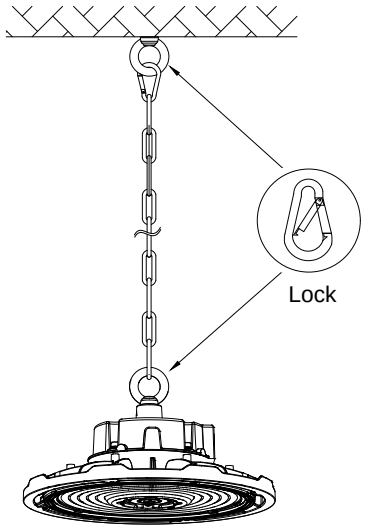

Figure 3

B) Pendant Mount

1. Remove the original ring from the driver. (Figure 4)
2. Install the adapter(purchased separately) and secure it to the driver using a screw (included with the adapter). (Figure 5)
3. Screw the adapter with the fixture onto a pole and secure it with an screw (included with the adapter). (Figure 6)

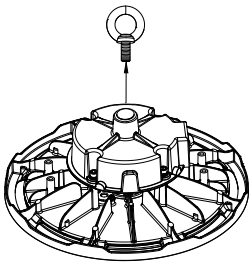

Figure 4

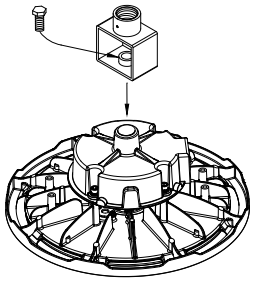

Figure 5

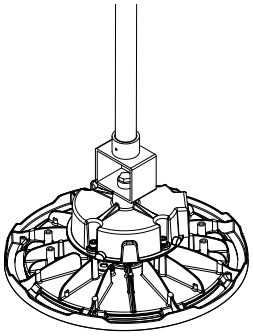

Figure 6

Installation Instruction

Notice: Always turn off the power supply from main circuit breaker first!

C) Ceiling mount

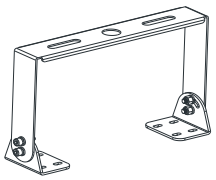

1. Using the Yoke mount bracket as a template, mark and drill holes in the ceiling. Use a hammer to install the anchors into the drilled holes. (Figure 7 and Figure 8)
2. Attach the U-shaped yoke mount bracket to the mounting surface utilizing appropriate hardware based upon the material of the ceiling (Figure 9)
3. Attach the L-shaped yoke mount brackets onto the fixture. (Figure 10)
4. Secure the fixture to the ceiling by combine the U-shaped and L-shaped brackets. (Figure 11)
5. After attaching the fixture to the ceiling, connect the wires of the fixture to the mains in accordance with local wiring rules and regulations. (Figure 12)

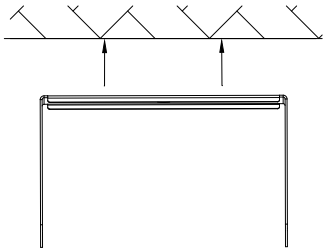

Figure 7

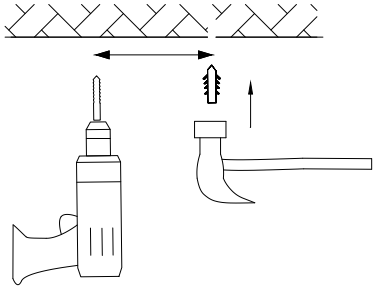

Figure 8

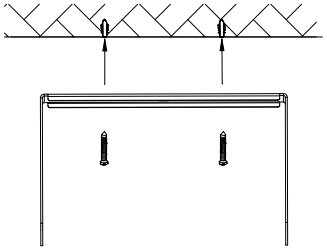

Figure 9

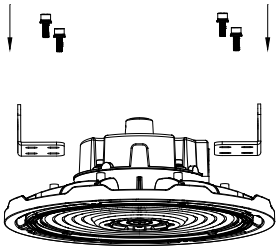

Figure 10

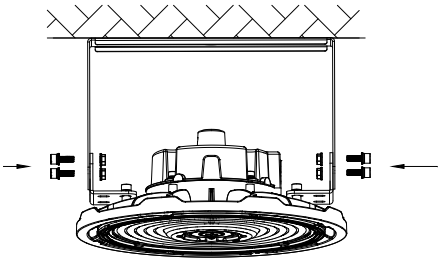

Figure 11

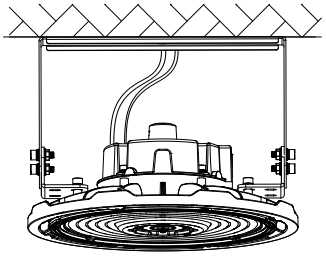

Figure 12

Surface mounting in multiple applications

Ceiling mount	Wall mount	Conduit / Pipe mount
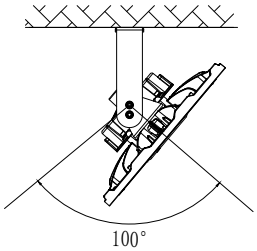	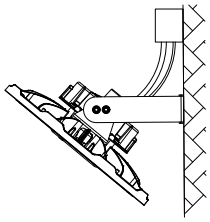	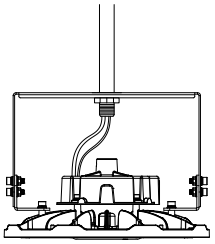

Please use dimming+, dimming- (DC 10V) marking leads to connect outside dimmer.
The pink wire and black wire with shrinkable tubing shall not be damaged (no connection). Class 1 Wiring Only.

Installation Instruction

Shade reflector and Wire Guard installation

Install the Shade reflector or Wire Guard, then tighten the screws.

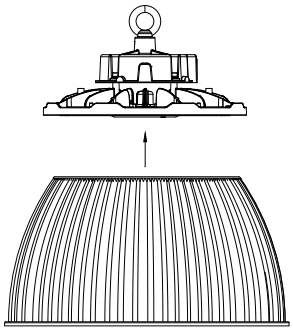

POLY CARBONATE shade reflector

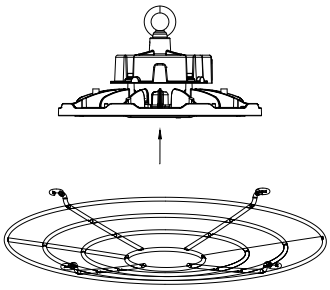

Wire Guard

Screw holes as shown below

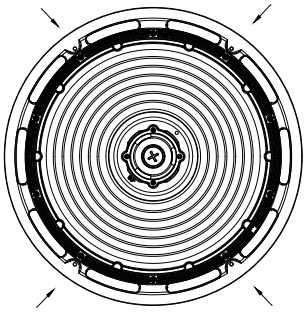

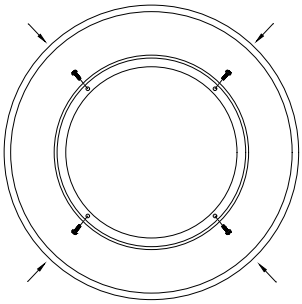

Installation Instruction

Notice: Always turn off the power supply from main circuit breaker first!

Additional accessory

Emergency model: BLD-RMXXX-YYY 100-347VAC 30W/
40W/60W Emergency power optional

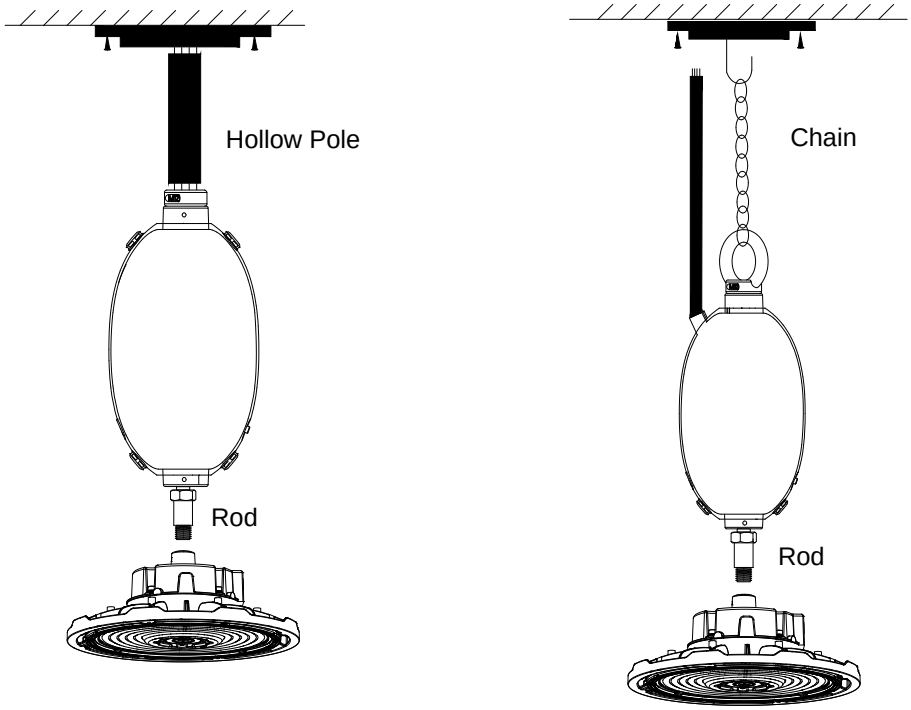

General wiring diagram

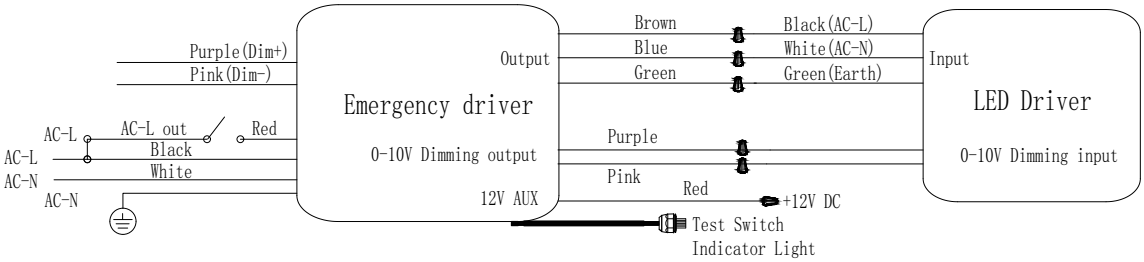

Installation Instruction

DC Motion Sensor Installation

Additional Sensor model:

ANT-5-4T(Microwave), ANT-6-4T(PIR), EFS06R(Microwave), Suitable with Audio jack receptacle.
ANT-5-4R(Microwave), ANT-6-4R(PIR), Suitable with 3 pin receptacle.

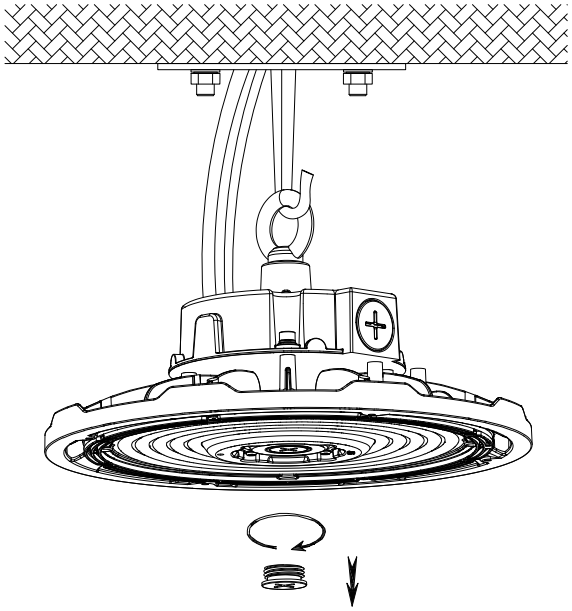

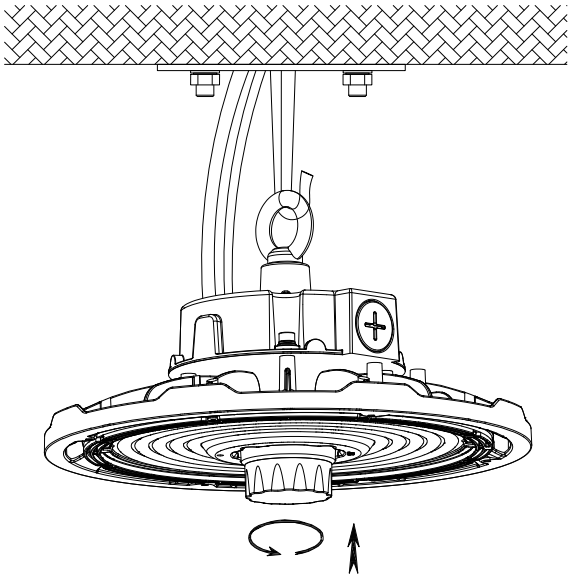

Installation steps:
1. Screw the 1/2" knockout out with screw driver.
2. Screw the sensor in.
3. Programming of the sensor is done with the remote-control unit (ordered separately).

Installation Instruction

CCT & Wattage Adjustment instruction

Notice: Always turn off the power supply from main circuit breaker first!

